THIS DRAWING IS UNPUBLISHED. RELEASED FOR PUBLICATION 20
© COPYRIGHT 20 BY TYCO ELECTRONICS CORPORATION. ALL RIGHTS RESERVED.

LOC	DIST
AA	00

REVISIONS

P	LTR	DESCRIPTION	DATE	DWN	APVD
	C	ECO-07-022131	02NOV07	LAM	JW
	C1	REVISED PER ECO-09-025699	11DEC09	KK	AEG
	C2	ECO-14-018192	27SEP2018	LL	SH
	C3	ECO-18-014918	20AUG2019	RR	SH

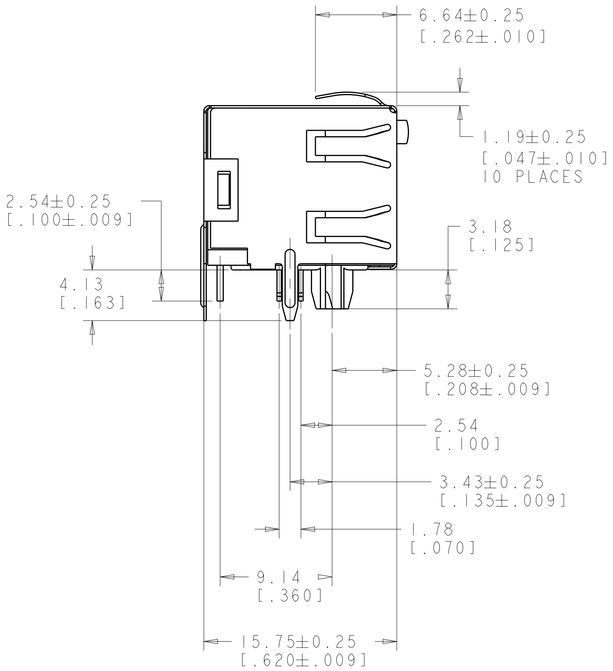

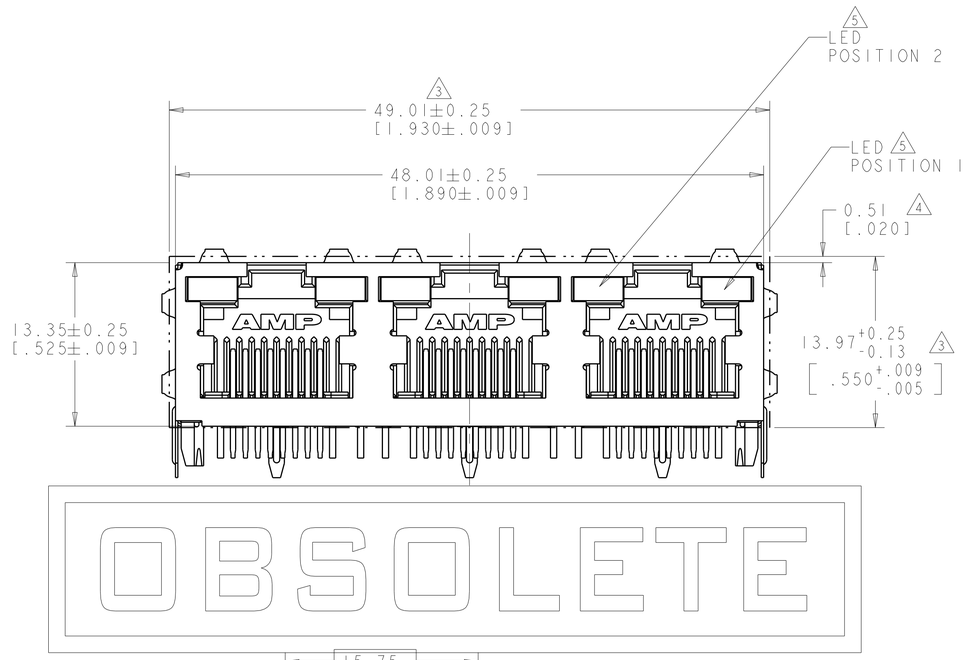

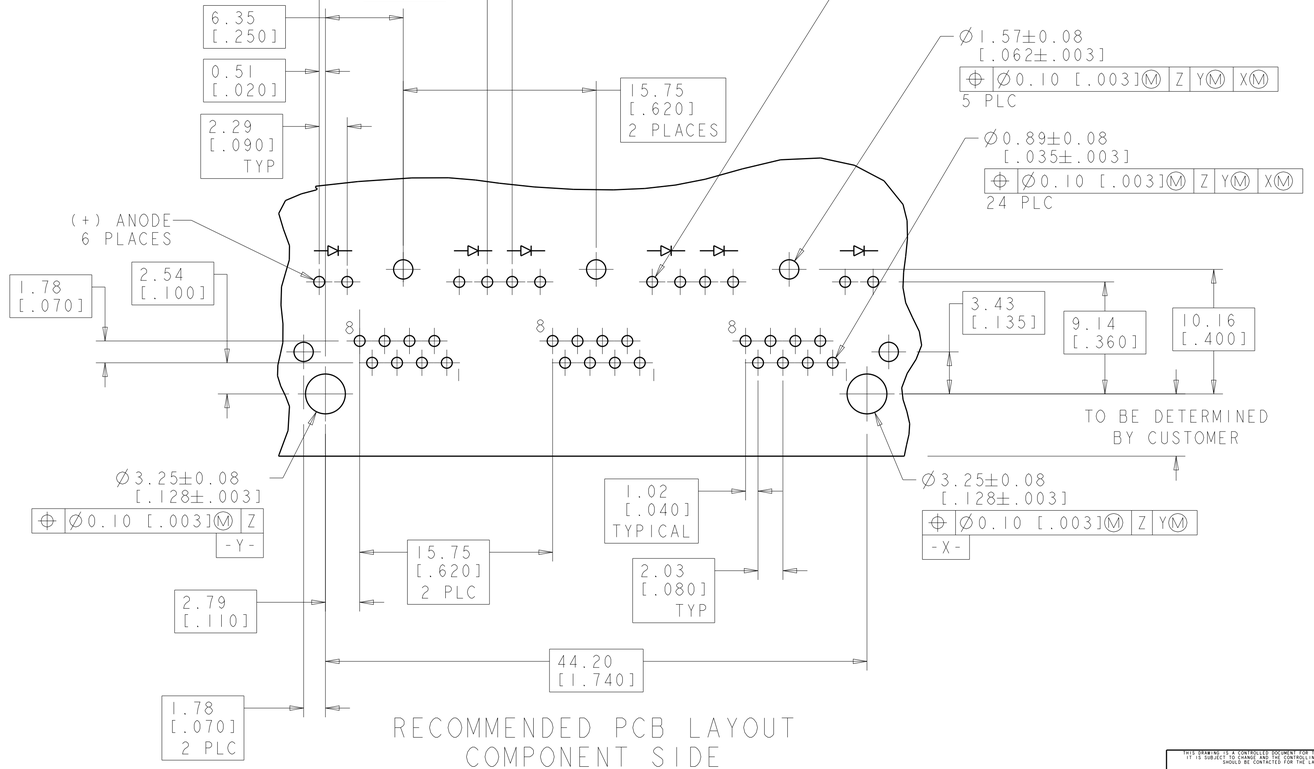

RECOMMENDED PCB LAYOUT
COMPONENT SIDE

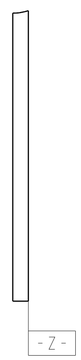

1. MATERIAL: HOUSING - THERMOPLASTIC, BLACK, UL94V-0.
TERMINALS - .36[.014] THICK PHOSPHOR BRONZE PLATED WITH 3.81µm [.000150] MINIMUM THICK BRIGHT TIN-LEAD IN SOLDER AREA, 1.27µm [.000050] MINIMUM GOLD IN LOCALIZED PLATE AREA. ENTIRE TERMINAL PLATED WITH 1.27µm [.000050] MINIMUM THICK NICKEL.
SHIELD - 0.196[.0077] THICK COPPER ZINC ALLOY, PREPLATED WITH 1.27µm [.000050] MINIMUM SATIN NICKEL WITH 2.03µm [.000080] MINIMUM TIN POST DIPPED ON PCB TABS.
LIGHT EMITTING DIODE (LED) - DIFFUSED EPOXY LENS 0.51 X 0.51 [.020 X .020] CARBON STEEL WIREFRAME LEADS PLATED WITH 8.89µm[.000350] TIN/COPPER OVER 2.03µm[.000080] SILVER OVER 1.02µm[.000040] NICKEL UNDERPLATE OVER 2.03µm [.000080] COPPER UNDERPLATE.

2. JACK CAVITY CONFORMS TO FCC RULES AND REGULATIONS PART 68, SUBPART F.

3. SUGGESTED PANEL OPENING DIMENSIONS.

4. SUGGESTED CLEARANCE BETWEEN TOP OF CONNECTOR AND TOP OF PANEL OPENING.

5. SEE TABLE FOR COLOR OF LEDS AND NUMBER REQUIRED.

6. THIS MODULAR JACK WITH INTEGRATED LED IS NOT IR REFLOW SOLDERING PROCESS COMPATIBLE.

7. OBSOLETE PARTS: OBSOLETE CIS STREAMLINING PER D.RENAUD/D.SINISI

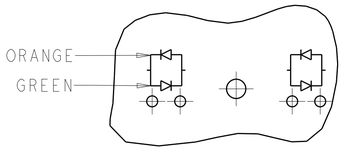

LED CURRENT DIAGRAM
1116132-7 ONLY

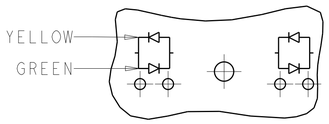

LED CURRENT DIAGRAM
1116132-8 ONLY

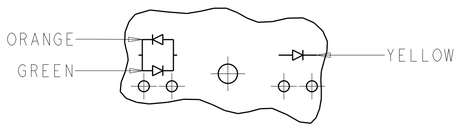

LED CURRENT DIAGRAM
1116132-9 ONLY
OBSOLETE

	POSITION 2	POSITION 1	PART NUMBER
	INDICATOR COLOR		
OBSOLETE	~~ORANGE/GREEN~~	~~YELLOW~~	~~1116132-9~~
OBSOLETE	~~YELLOW/GREEN~~	~~YELLOW/GREEN~~	~~1116132-8~~
7 OBSOLETE	~~ORANGE/GREEN~~	~~ORANGE/GREEN~~	~~1116132-7~~
SUPERSEDED BY: 6116132-5	YELLOW	YELLOW	1116132-6
	~~GREEN~~	~~GREEN~~	~~1116132-5~~
OBSOLETE	~~GREEN~~	~~YELLOW~~	~~1116132-4~~
7 OBSOLETE	~~YELLOW~~		~~1116132-3~~
OBSOLETE		~~GREEN~~	~~1116132-2~~
OBSOLETE	YELLOW	GREEN	1116132-1

THIS DRAWING IS A CONTROLLED DOCUMENT FOR TYCO ELECTRONICS CORPORATION. IT IS SUBJECT TO CHANGE AND THE CONTROLLING ENGINEERING ORGANIZATION SHOULD BE CONTACTED FOR THE LATEST REVISION.

DWN	D. J. AHERON	29JUL98
CHK	J. WESTMAN	13OCT07
APVD	E. LAURER	29JUL98

Tyco Electronics
Tyco Electronics Corporation
Harrisburg, PA 17105-3608

DIMENSIONS: mm [INCH]

TOLERANCES UNLESS OTHERWISE SPECIFIED:
0 PLC ±-
1 PLC ±-
2 PLC ±0.13[.005]
3 PLC ±-
4 PLC ±-
ANGLES ±1°

MATERIAL: SEE NOTE 1
FINISH: SEE NOTE 1

PRODUCT SPEC: 108-1163-4
APPLICATION SPEC: 114-2154
WEIGHT: -

NAME: INVERTED MODULAR JACK ASSEMBLY, 1 X 3, SHIELDED, PANEL GROUND TABS, LED

SIZE	CAGE CODE	DRAWING NO	RESTRICTED TO
A1	00779	C-1116132	

CUSTOMER DRAWING | SCALE 4:1 | SHEET 1 OF 1 | REV C3