THIS DRAWING IS UNPUBLISHED. RELEASED FOR PUBLICATION APRIL , 2004.
© COPYRIGHT 2004 By – ALL RIGHTS RESERVED.

REVISIONS

P	LTR	DESCRIPTION	DATE	DWN	APVD
	A2	ECO-18-009885	24JUL2018	RZ	RS

NOTES:

1. SINGLE PACK IN ACCORDANCE WITH SPEC 107-3275
2. 100 TRAY PACK IN ACCORDANCE WITH SPEC 107-3275
3. 0.08µm Au PLATING OVER 1.27µm Ni PLATING
4. 0.08µm Au PLATING OVER 1.27µm Ni PLATING OVER 0.76µm Cu PLATING
5. 0.76µm Au PLATING OVER 1.27µm Ni PLATING OVER 0.76µm Cu PLATING
6. PASSIVATED
7. FOR TECHNICAL DATA REFER TO YOUR LOCAL TYCO ELECTRONICS SALES OFFICE
8. ALL DIMENSIONS ARE NOMINAL FOR REFERENCE ONLY UNLESS OTHERWISE STATED

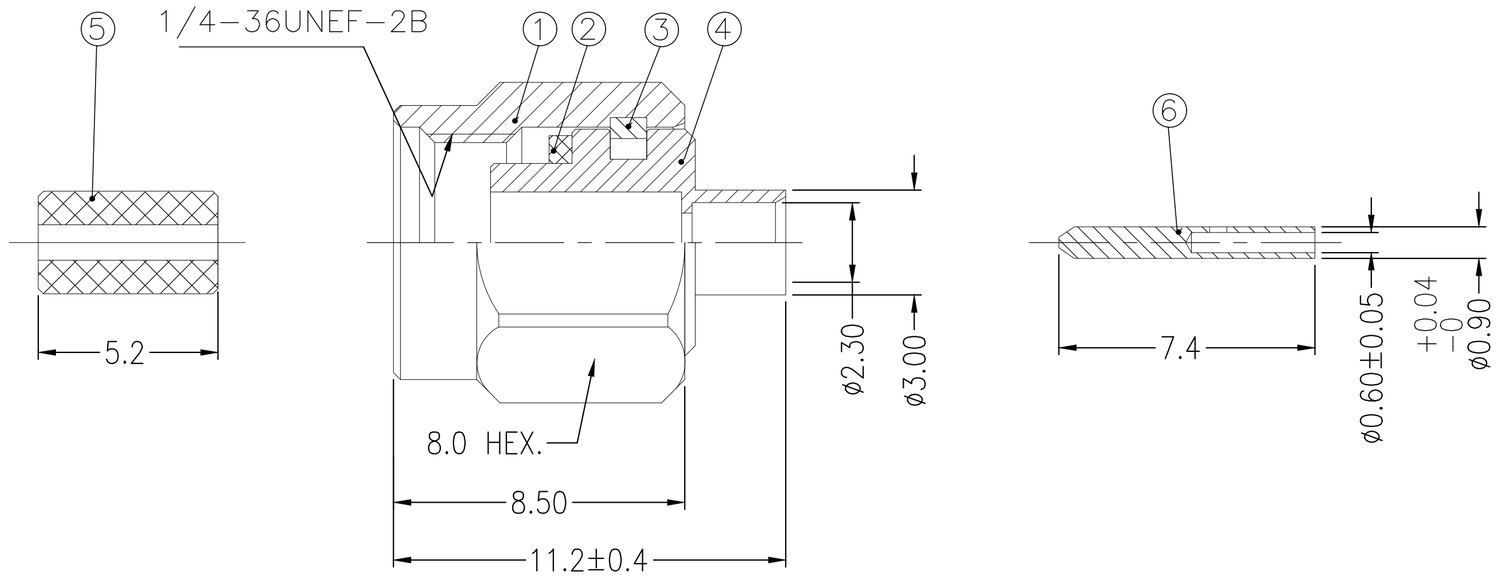

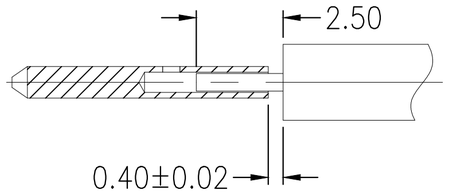

RECOMMENDED CABLE STRIPPING DIM'S

		1	1	1	1	1	1	BRASS (5)	CENTER CONTACT	6
		1	1	1	1	1	1	PTFE	INSULATOR	5
		1	1	–	–	–	–	BRASS (4)	BODY	4
		–	–	1	1	–	–	STAINLESS STEEL (3)	BODY	4
		–	–	–	–	1	1	STAINLESS STEEL (3)	BODY	4
		1	1	1	1	1	1	STAINLESS STEEL	CIRCLIP	3
		1	1	1	1	1	1	SILICON	GASKET	2
		1	1	–	–	–	–	BRASS (4)	SHELL	1
		–	–	1	1	–	–	STAINLESS STEEL (6)	SHELL	1
		–	–	–	–	1	1	STAINLESS STEEL (3)	SHELL	1
		3--1	3--0	2--1	2--0	1--1	1--0	MATERIAL	DESCRIPTION	ITEM
		(2)	(1)	(2)	(1)	(2)	(1)			
		QUANTITY PER ASSY						PARTS LIST		

ELECTRICAL	MECHANICAL	ENVIRONMENTAL
Impedance (Ohm) 50	Interface Dimension MIL-STD-348B Fig. 310-1	TEMPERATURE RANGE -65°C TO + 165°C
Frequency Range (GHz) DC to 12.4GHz	Recommended Coupling Torque 7 to 10 In-Lbs	THERMAL SHOCK MIL-STD-202, METH.107, COND.A
Voltage Rating (Peak) @ Sea Level 170 V RMS	Force to Engage and Disengage (In/lbs) 2.0 MAX	CORROSION MIL-STD-202, METH.101, COND.B
Insulation Resistance (MIN.) 1000 M ohms	Center Cantact Captivation Axial (Lbs) N/A Radial (In/Oz) N/A	VIBRATION MIL-STD-202, METH.204, COND.D
Contact Resistance (Milliohms MAX) Center Contact 3.0 Outer Contact 2.0	Cable Retention Axial (Lbs) N/A	SHOCK MIL-STD-202, METH.213, COND.I
Dielectric Withstand Voltage: 750 V RMS Max	Mating cycles 500 cycles	MOISTURE RESISTANCE MIL-STD-202, METH.106,
Insertion Loss : 0.06*SQRT(F) dB		ROHS COMPLIANT
VSWR: 1.05 + 0.05*SQRT(F) (GHz)		
RF leakage: N/A		
3rd Intermodulation: N/A		

THIS DRAWING IS A CONTROLLED DOCUMENT.

DIMENSIONS: mm

TOLERANCES UNLESS OTHERWISE SPECIFIED:
0 PLC ± –
1 PLC ± 0.2
2 PLC ± 0.1
3 PLC ± 0.05
4 PLC ± –
ANGLES ± 3

MATERIAL: SEE TABLE
FINISH: –

DWN R.SMITH 28JAN04
CHK S.PARLOW 28JAN04
APVD F.WHEELER-KING 28JAN04
PRODUCT SPEC 108-112003
APPLICATION SPEC 408-4765
WEIGHT 0.000000

TE Connectivity Ltd.

NAME: SMA STRAIGHT PLUG DIRECT SOLDER NON CAPTIVE CENTRE CONTACT RG405/U

SIZE A2 | CAGE CODE 00779 | DRAWING NO C-1478904 | RESTRICTED TO –

CUSTOMER DRAWING | SCALE 8:1 | SHEET 1 OF 1 | REV A2

1478904

1471-9 (1/15)