THIS DRAWING IS UNPUBLISHED. RELEASED FOR PUBLICATION 20
© COPYRIGHT 20 BY TYCO ELECTRONICS CORPORATION. ALL RIGHTS RESERVED.

Creo Parametric 3.0
DO NOT REVISE EXCEPT BY CAD

LOC	DIST
AP	-

REVISIONS

P	LTR	DESCRIPTION	DATE	DWN	APVD
	C1	REVISED DRAWING ECO-17-001593	18SEP2018	NCL	NMS
	C2	REVISED DRAWING ECO-19-016368	28OCT2019	PSB	NMS

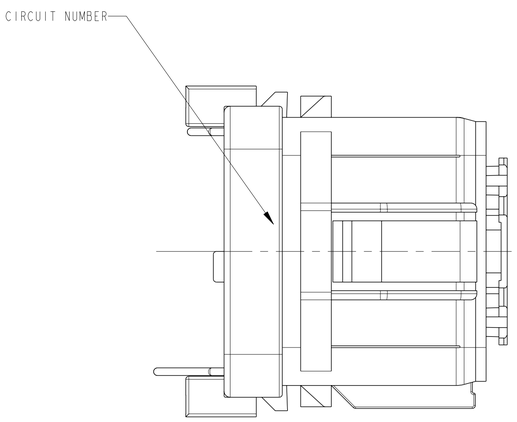

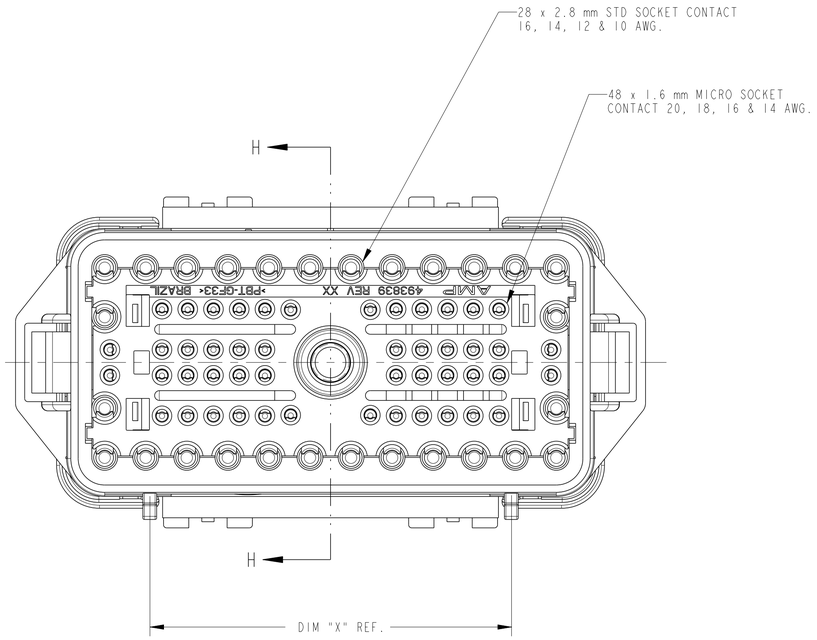

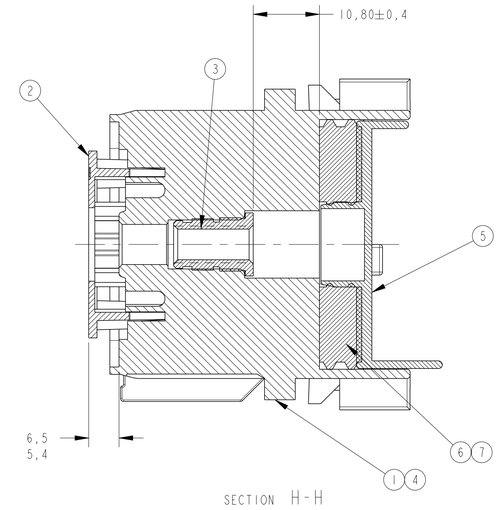

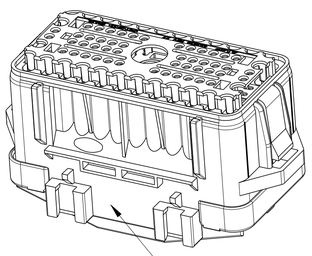

PERSPECTIVE VIEW
SCALE 1:1

DATE CODE
XXXXXXX-X / XXXXXX
I.D. NO.
COMPONENT CHANGE
SHIFT
DAY
MONTH
YEAR

6	B	71,50	1599186-6
6	B	71,50	1599186-5
6	B	71,50	1599186-4
5	A	59,00	1599186-3
6	B	71,50	1599186-2
5	A	59,00	1599186-1
KEY	DIM "X"	PART NUMBER	

POLARIZATION

1 - PARA ASSEGURAR A COMPATIBILIDADE FUNCIONAL ENTRE AS PEÇAS, ELAS DEVEM SER FERRAMENTADAS JUNTAS E MANUFATURADAS POR UM MESMO PROVEDOR.

2 - 1599185 (HSG ASSY 76 POSN PIN CONTACT) DEVE MONTAR COM 1599186 (HSG ASSY 76 POSN SOCKET CONTACT) APROPRIADAMENTE.

3 - AS PEÇAS DEVEM ENCAIXAR COMPLETAMENTE USANDO-SE TORQUE NO PARAFUSO DE 4,8±0,8 Nm.

4 - PARA EXTRAÇÃO DO TERMINAL UTILIZAR FERRAMENTA CONFORME TE SPEC 411-37031

5 - POLARIZAÇÃO "KEY A "

6 - POLARIZAÇÃO "KEY B".

7 -NAO USAR FIO DE 20 AWG ISOLAÇÃO FINA. EXCETO PARA RAICHEM 55E 0,50mm² CABO O.D 1,21-1,31mm.

8 - SOMENTE PROTÓTIPO.

1 - TO ENSURE FUNCTIONAL COMPATIBILITY BETWEEN PARTS THEY MUST BE TOOLED TOGETHER AND MOLDED BY A SINGLE SOURCE.

2 - 1599185 (HSG ASSY 76 POSN PIN CONTACT) MUST MATE PROPERLY WITH 1599186 (HSG ASSY 76 POSN SOCKET CONTACT).

3 - PARTS MUST FULLY MATE USING 4.8±0.8 Nm TORQUE ON BOLT.

4 - FOR TERMINAL EXTRACTION TOOL SEE TE SPEC 411-37031

5 - POLARIZATION "KEY A"

6 - POLARIZATION "KEY B"

7 -DO NOT USE 20 AWG THIN WALL INSULATION WIRE. EXCEPT BY RAICHEM 55E 0,50mm2 CABLE O.D 1,21-1,31mm.

8 - PROTOTYPE ONLY

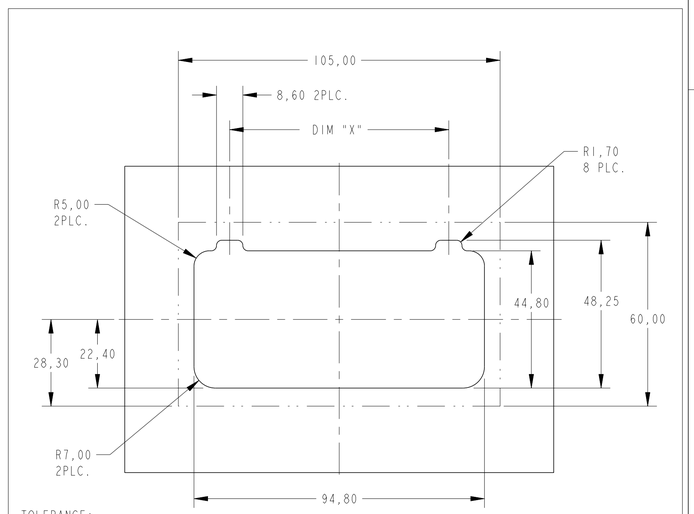

TOLERANCE:
1 PLC: ± 0.5
2 PLC: ± 0.25

PANEL CONSTRUCTION
SCALE 1:1

ESPESSURA:1,8 - 2,5
THICKNESS

OBSOLETE

1	-	-	-	-	-	7	GROMMET 76 POSN.	SILICONE	MARROM/BROWN
-	-	1	1	-	-	6	GROMMET, WIRE SEAL	SILICONE	AZUL/BLUE
1	1	1	1	1	1	5	COVER 76 POSN. - WIRE SEAL	PBT 33% GF	NATURAL
1	1	1	-	1	-	4	HSG 76 POSN SOCKET CONTACT FEMALE	PBT 33% GF	PRETO/BLACK
1	1	1	1	1	1	3	NUT 6 mm	LATAO/BRASS	—
1	1	1	1	1	1	2	SPACER 76 POSN,SOCKET CONTACT	PBT 33% GF	VERMELHO/RED
-	-	-	1	-	1	1	HSG 76 POSN SOCKET CONTACT FEMALE	PBT 33% GF	NATURAL
REQ.PER ASSY						ITEM	DESCRIPTION	MATERIAL	FINISH
8 6	-5	-4	-3	-2	-1				
1599186									

TOTAL HOLES	TE PART NUMBER
76	1599186-6
76	1599186-5
76	1599186-4
76	1599186-3
76	1599186-2
76	1599186-1

76 75 74 73 72 71 70 69 68 67 66 65 64 63 62 61 60 59 58 57 56 55 54 53 52 51 50 49 48 47 46 45 44 43 42 41 40 39 38 37 36 35 34 33 32 31 30 29 28 27 26 25 24 23 22 21 20 19 18 17 16 15 14 13 12 11 10 9 8 7 6 5 4 3 2 1

THIS DRAWING IS A CONTROLLED DOCUMENT FOR TYCO ELECTRONICS CORPORATION. IT IS SUBJECT TO CHANGE AND THE CONTROLLING ENGINEERING ORGANIZATION SHOULD BE CONTACTED FOR THE LATEST REVISION.

DIMENSIONS: mm

TOLERANCES UNLESS OTHERWISE SPECIFIED:
0 PLC ±-
1 PLC ±0.3
2 PLC ±0.20
3 PLC ±-
4 PLC ±-
ANGLES ±1°

MATERIAL SEE TABLE -
FINISH SEE TABLE -

DWN	E.LOPES	23APR2004
CHK	P.L.FARIA	23APR2004
APVD	D.A.OLIVEIRA	23APR2004
PRODUCT SPEC	-	
APPLICATION SPEC	-	
WEIGHT	-	

Tyco Electronics
TYCO ELECTRONICS do Brasil LTDA.
São Paulo , Brasil

NAME
HOUSING ASSY 76 POSN., SOCKET CONTACT
-

SIZE	CAGE CODE	DRAWING NO	RESTRICTED TO
A1	00779	C-1599186	

RESTRICTED CUSTOMER

SCALE	SHEET	OF	REV
2:1	1	1	C2

AMP 4805 REV 31MAR2000