DRAWING MADE IN KOREAN PROJECTION

DIMENSIONS IN ~~INCHS~~ . MM

CUSTOMER DRAWING

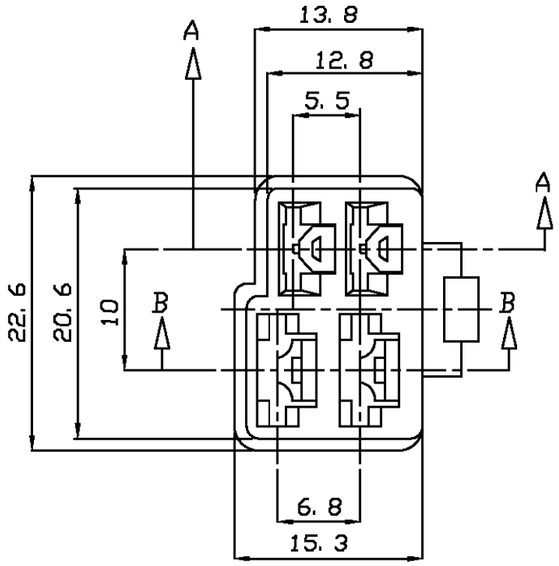

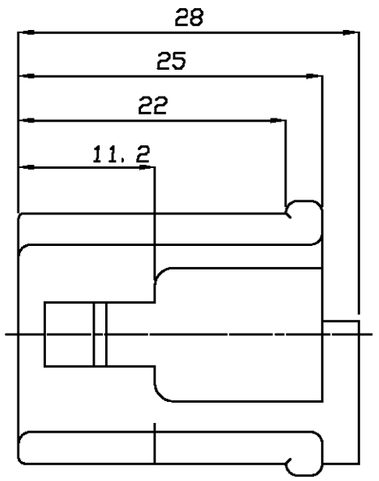

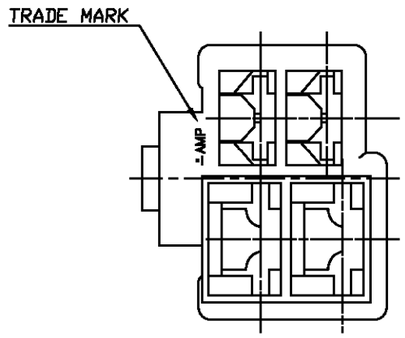

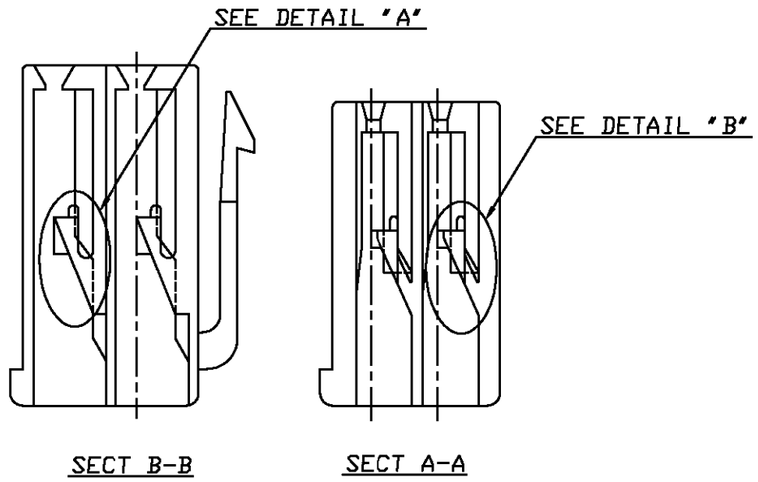

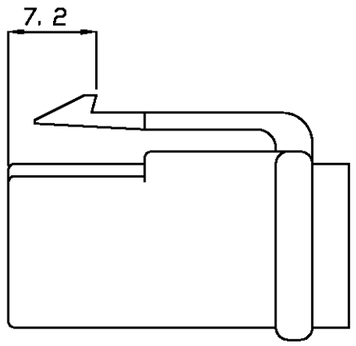

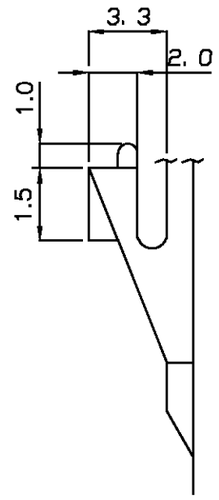

DETAIL "A"

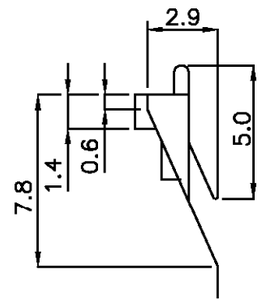

DETAIL "B"

NATURAL	702902-1	85094-1
COLOR	MATERIAL	PART NO.

LTR	REVISION RECORD	DR	CHK	DATE
D	RELEASED ECN(RD97-023)	JW	JK	'97 01/24

© 1997 AMP KOREA
ALL RIGHT RESERVED AMP PRODUCTS COVERED BY PATENTS AND OR PATENTS PENDING

AMP KOREA

WIRE RANGE ---	INSULATION DIA ---	NAME 250/312 HYBRID 4P PLUG HSG			
MATERIAL SEE TABLE	FINISH/COLOR SEE TABLE	TOLERANCES 0<XX<10 ±0.2 10<XX<30 ±0.25 30<XX<100±0.3 ANGLES ±3°	SIZE A3	LOC DS	NUMBER 85094
DR	APP		SCALE 1/1	REV D	SHEET 1/1
CHK	REL				

PRINT DIST.