THIS DRAWING IS UNPUBLISHED. RELEASED FOR PUBLICATION N/A ,N/A .
© COPYRIGHT N/A BY TYCO ELECTRONICS CORPORATION. ALL RIGHTS RESERVED.

LOC	DIST
DF	XO

REVISIONS

P	LTR	DESCRIPTION	DATE	DWN	APVD
	A	REV PER 0G3D-0032-03	11-03	JK	JL

COMPONENT	MATERIAL	FINISH
HOUSING JAM NUT LOCK WASHER	STAINLESS STEEL PER ASTM-A-484 OR ASTM-A-582 TYPE 303	GOLD PLATED PER ASTM-B-488 – –
– DIELECTRIC –	PTFE FLUORCARBON PER ASTM-D-1457 –	– – –
– CENTER CONTACT –	BERYLLIUM COPPER PER ASTM-B-196 OR 197 ALLOY C17300, CONDITION H	GOLD PLATED PER ASTM-B-488 –
– "O" RING –	SILICONE RUBBER PER A-A59588 –	– – –
– – –	– – –	– – –
– FERRULE –	COPPER OR BRASS ALLOY, ROCKWELL F65 MAX	GOLD PLATED PER ASTM-B-488 –
– – –	– – –	– – –
– – –	– – –	– – –

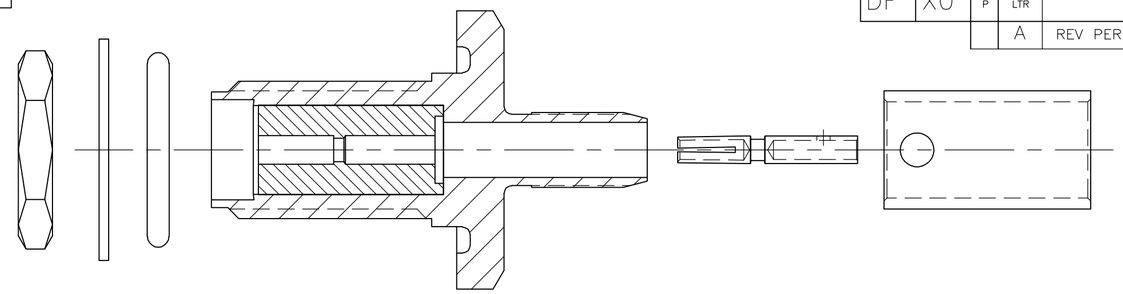

AS SHIPPED TO CUSTOMER

ENVIRONMENTAL
TEMPERATURE RATING: -65°C TO +165°C
VIBRATION: MIL-STD-202, METHOD 204, CONDITION D
SHOCK: MIL-STD-202, METHOD 213, CONDITION 1
MOISTURE RESISTANCE: MIL-STD-202, METHOD 106
CORROSION: MIL-STD-202, METHOD 101, CONDITION B. 5% SALT SPRAY
THERMAL SHOCK: MIL-STD-202, METHOD 107, CONDITION B EXCEPT HIGH TEMP 85°C

MECHANICAL		
INTERFACE DIMENSIONS: MIL-STD-348A FIG. 310.2		
RECOMMENDED MATING TORQUE: 7-10 IN-LBS		
FORCE TO ENGAGE & DISENGAGE (IN-LBS MAX:) 2.0		
WEIGHT (GRAMS): TBD		
MATING CHARACTERISTICS:	INSERTION (MAX LBS)	2
	WITHDRAWAL (MIN OZ):	1
CABLE RETENTION:	AXIAL FORCE (LBS)	30
	TORQUE (IN-OZ):	N/A
CENTER CONTACT CAPTIVATION:	AXIAL (LBS):	6.0
	RADIAL (IN-OZ):	N/A

ELECTRICAL		
NORMAL IMPEDANCE (OHMS): 50		
FREQUENCE RANGE (GHz): DC TO 12.4		
VOLT RATING @ SEA LEVEL (VRMS MAX): 250		
VSWR: 1.15+0.02f(GHz)		
INSERTION LOSS: (dB MAX): .06 $\sqrt{f(GHz)}$		
RF LEAKAGE (dB MIN): -60 @ 2-3GHz		
CORONA 70,000 FT (VRMS MIN): 190		
DIELECTRIC WITHSTANDING VOLTAGE (VRMS MIN) AT SEA LEVEL: 750		
I.R. (MEGOHMS MIN): 5000		
RF HIGH POTENTIAL AT SEA LEVEL (VRMS MIN @ 5 MHz): 500		
CONTACT RESISTANCE (MILLIOHMS MAX):		
	CENTER CONTACT:	3.0
	OUTER CONTACT:	2.0
	CABLE TO HOUSING:	0.5

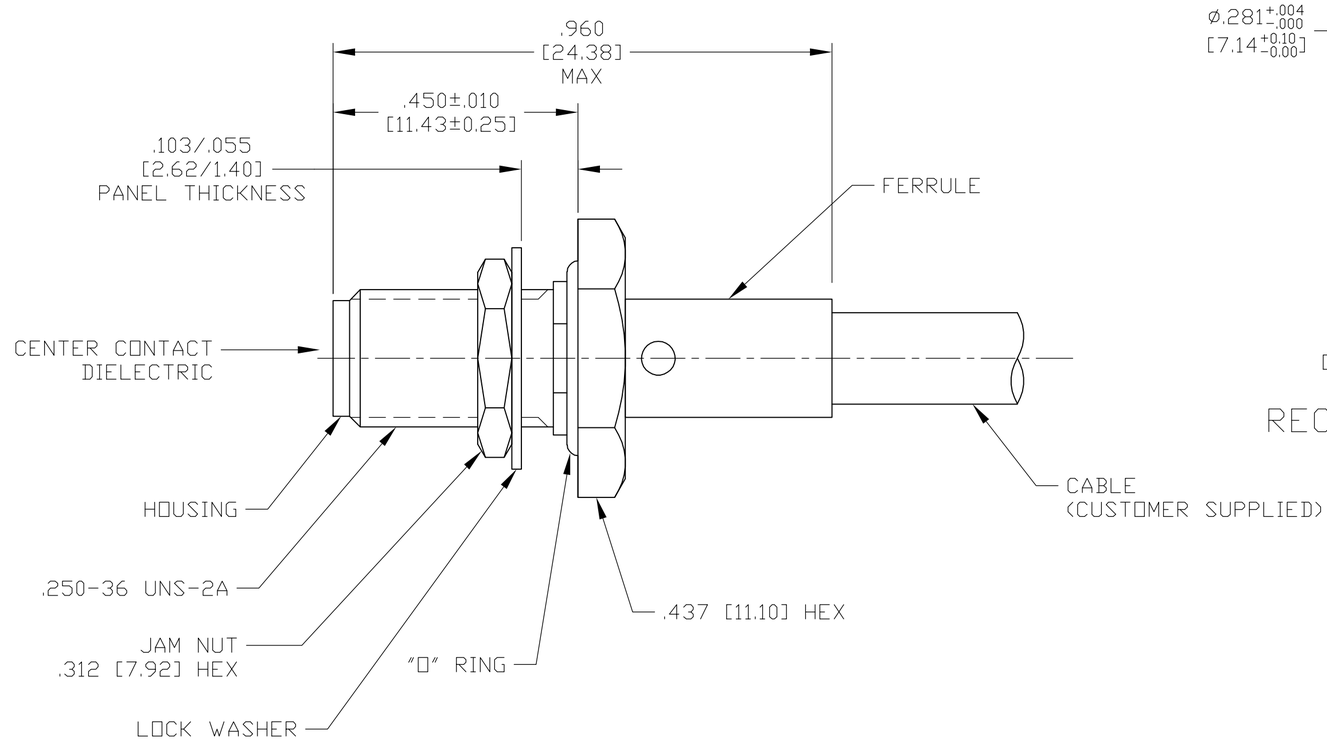

ASSEMBLED VIEW

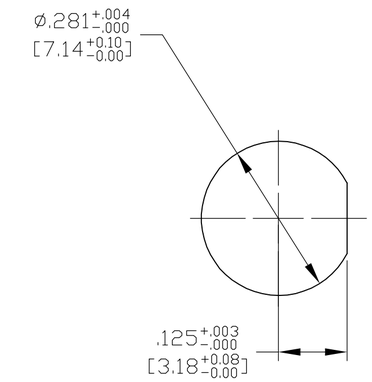

RECOMMENDED PANEL CUTOUT

1051983

DESIGNED TO USE RG-122/U OR EQUIVALENT	
CABLE ENTRY DIAMETER MIN	
HOUSING:	.099 [2.51]
CONTACT:	.033 [0.84]
DIELECTRIC:	N/A
–	–
FERRULE:	.172 [4.37]

THIS DRAWING IS A CONTROLLED DOCUMENT.

DIMENSIONS: INCHES [mm]

TOLERANCES UNLESS OTHERWISE SPECIFIED:
0 PLC ± –
1 PLC ± –
2 PLC ± –
3 PLC ± .005 [0.13]
4 PLC ± –
ANGLES ± –

MATERIAL: SEE TABLE
FINISH: SEE TABLE

DWN	J. KAISER	9/17/02
CHK	J.LIPPERT	10-18-02
APVD	J.LIPPERT	10-18-02
PRODUCT SPEC	–	
APPLICATION SPEC	408-8749	
WEIGHT	TBD	

tyco Electronics — Tyco Electronics Corporation, Harrisburg, PA 17105

NAME: SMA STRAIGHT BULKHEAD FEEDTHRU CABLE JACK-SOLDER ATTACHMENT (M39012/59-3008) CAT A

SIZE	CAGE CODE	DRAWING NO	RESTRICTED TO
A2	00779	C-1051983	–

CUSTOMER DRAWING | SCALE 5:1 | SHEET 1 OF 1 | REV A

MA/COM # 2034-8008-90

1051983-1
PART NO.

AMP 1471-9 REV 31MAR2000

J:\DEPT1733\U.DIES\john_lippert\1253627_1_c.dwg