THIS DRAWING IS UNPUBLISHED. RELEASED FOR PUBLICATION -,- .
© COPYRIGHT - BY TYCO ELECTRONICS CORPORATION. ALL RIGHTS RESERVED.

LOC	DIST
AJ	00

REVISIONS

P	LTR	DESCRIPTION	DATE	DWN	APVD
	A	REVISED	3/24/2008	DW	JL

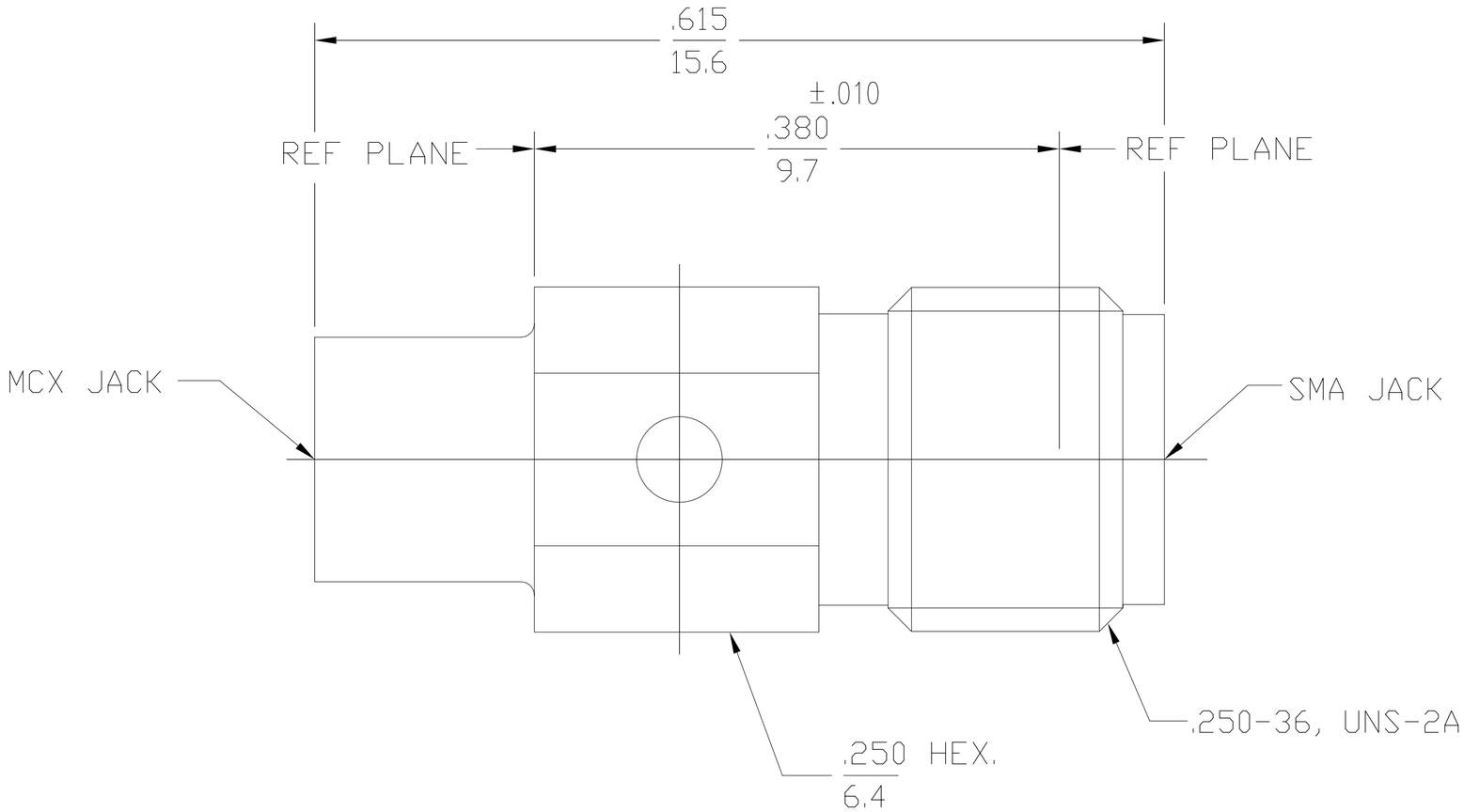

ELECTRICAL	
Nominal Impedance (Ohms)	50
Frequency Range (GHz)	DC to 6
Volt Rating (VRMS MAX)	
@ Sea Level	335
VSWR	1.25:1 Max @ 4 GHz
	1.35:1 Max @ 6 GHZ
Insertion Loss (dB MAX)	.1 dB/GHz
RF Leakage (dB MIN)	60 @ 1-3 GHz
Corona, 70,000 Ft (VRMS MIN)	250
Dielectric Withstanding Voltage	
(VRMS MIN) @ Sea Level	1,000
Contact Resistance (Milliohms MAX)	
Center Contact	5.0
Outer Contact	2.0
RF High Potential @ Sea Level	
(VRMS MIN @ 5 MHz)	670
I.R.(Megohms MIN)	10,000

MECHANICAL	
Interface Dimensions	
SMA	per MIL-STD-348A Fig 310.2
OSX	per CECC 22 220 Fig 2
Recommended Mating Torque	
	N/A
Mating Characteristics:	
	SMA
Insertion	3.0 lbs
Withdrawal	1.0 oz
Force to Engage/Disengage	
SMA	2.0 in-lbs
OSX	3.4 lbs Max / 1.77 lbs Min
Contact Retention	
Axial (Lbs)	6.0
Radial (In-Oz)	4.0
Weight (Grams)	TBD

ENVIRONMENTAL
TEMPERATURE RATING -65° TO +125°C
Vibration - MIL-STD-202, Method 204, Condition B
Shock - MIL-STD-202, Method 213, Condition A
Thermal Shock - MIL-STD-202, Method 107, Condition B, Except High Temp Shall Be Omitted
Moisture Resistance - MIL-STD-202, Method 106
Corrosion - MIL-STD-202, Method 101, Condition B, 48 Hours

.XXX = in
XX.X = mm (REF)

1061070

1061070-1
PART NUMBER

COMPONENT	MATERIAL	FINISH
HOUSING	STAINLESS STEEL PER ASTM-A484 AND ASTM-A582, TYPE 303	GOLD PLATE PER MIL-G-45204
DIELECTRIC	PTFE FLUOROCARBON PER ASTM-D-1457	N/A
CENTER CONTACT	BERYLLIUM COPPER PER ASTM-B-196 OR ASTM-B-197, ALLOY C17300, CONDITION H	GOLD PLATE PER MIL-G-45204

THIS DRAWING IS A CONTROLLED DOCUMENT.

DIMENSIONS: INCHES

TOLERANCES UNLESS OTHERWISE SPECIFIED:
0 PLC ± -
1 PLC ± -
2 PLC ± -
3 PLC ± .005
4 PLC ± -
ANGLES ± 1°

MATERIAL -
FINISH -

DWN	DRP	8/14/90
CHK	SA	8/21/90
APVD	BC	8/27/90
PRODUCT SPEC	—	
APPLICATION SPEC	—	
WEIGHT	—	

Tyco Electronics
Tyco Electronics Corporation
Harrisburg, PA 17105-3608

NAME
MCX JACK TO SMA JACK ADAPTER
(5880-2240-00)
—

SIZE	CAGE CODE	DRAWING NO	RESTRICTED TO
A2	00779	C-1061070	—

CUSTOMER DRAWING | SCALE 1:1 | SHEET 1 OF 1 | REV A

AMP 1471-9 REV 31MAR2000