8	7	6	5	4	3	2	1

THIS DRAWING IS UNPUBLISHED. RELEASED FOR PUBLICATION .2000.
© COPYRIGHT 1998 BY - ALL RIGHTS RESERVED.

REVISIONS

P	LTR	DESCRIPTION	DATE	DWN	APVD
	C1	ECR-16-015318	20SEP2017	GR	MKO
	C2	ECR-16-016768	15NOV2017	GR	MKO
	C3	ECR-21-123293	24FEB2022	RK	JB
	C4	REVISED PER ECR-24-201358	18APR2024	RK	WR

PN 1-6,2-6 & 0-2

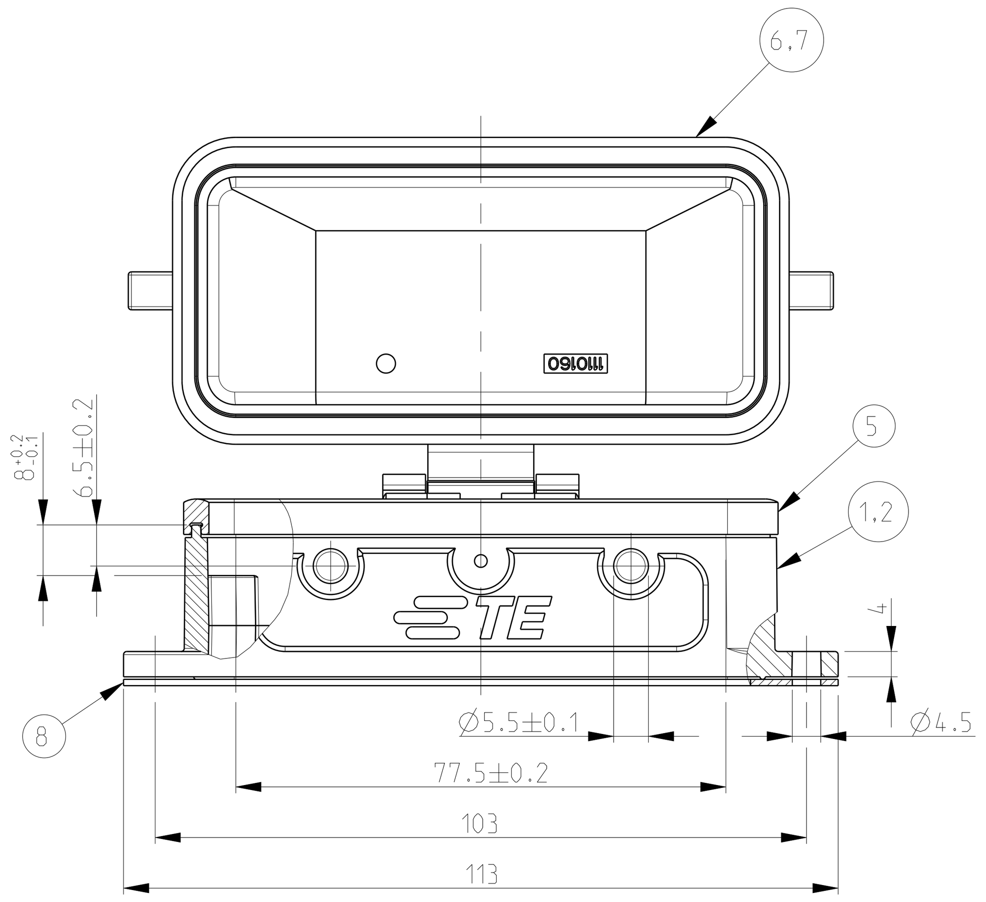

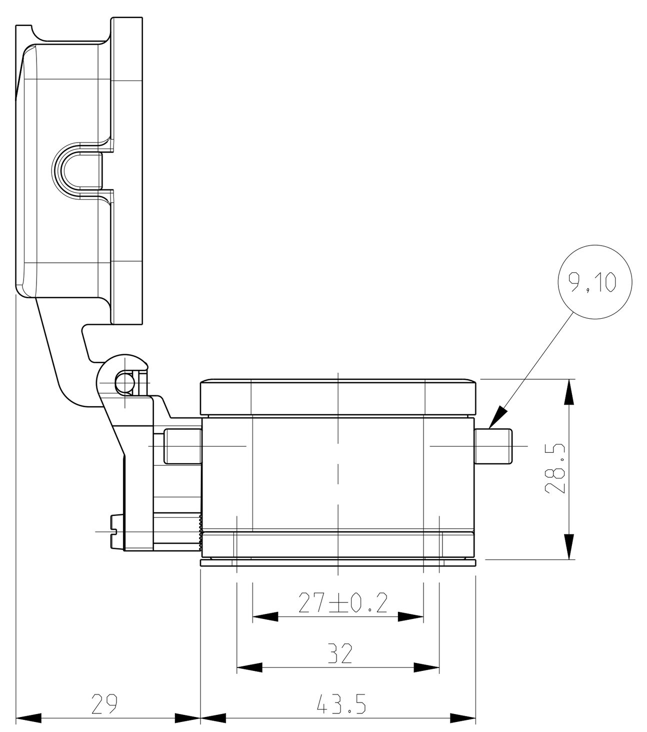

LANDING MILLED OFF

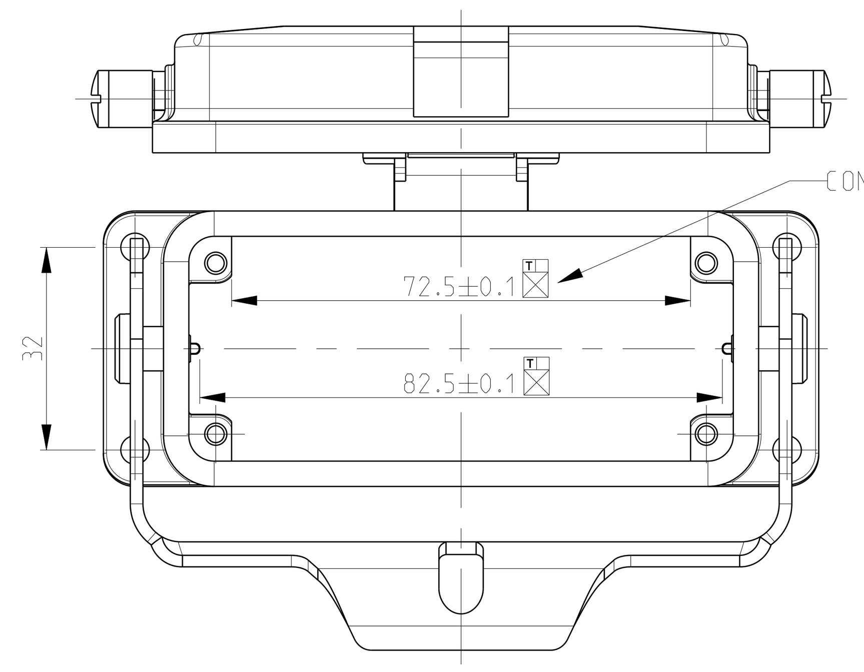

NOTES

1. Material:Housing:Aluminium Diecasting Alloy
   Seals: Neoprene
2. △2 Surface- Varnish -Grey : Red
   -Aluminium Oxide +Varnish Black
   -Chromit AL TCP - passivation
3. Varnish on the inside not necessary
4. Packaging Quantity 5 Pieces in a box
5. △5 Special Packaging Quantity 50 pieces in a kan ban box

PN 1-2,2-2,~~0-1,0-3~~ & ~~0-5~~

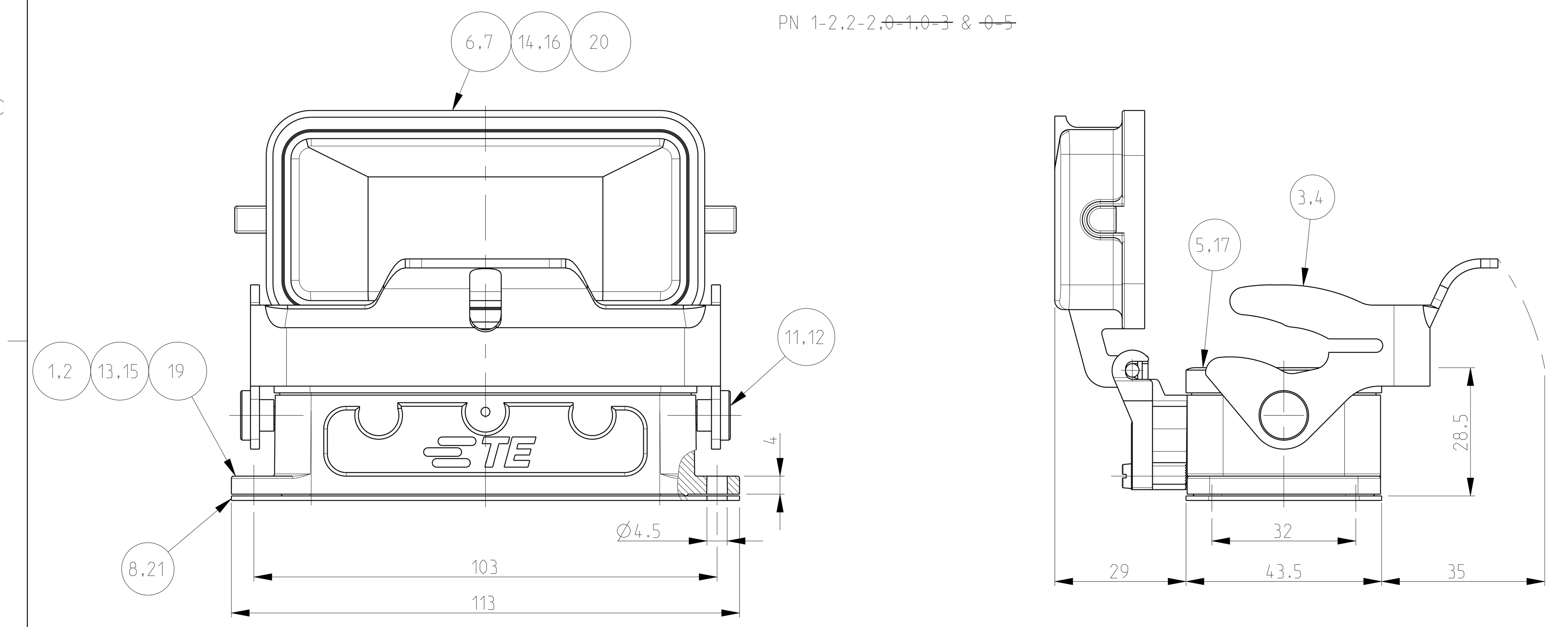

PANEL CUT OUT

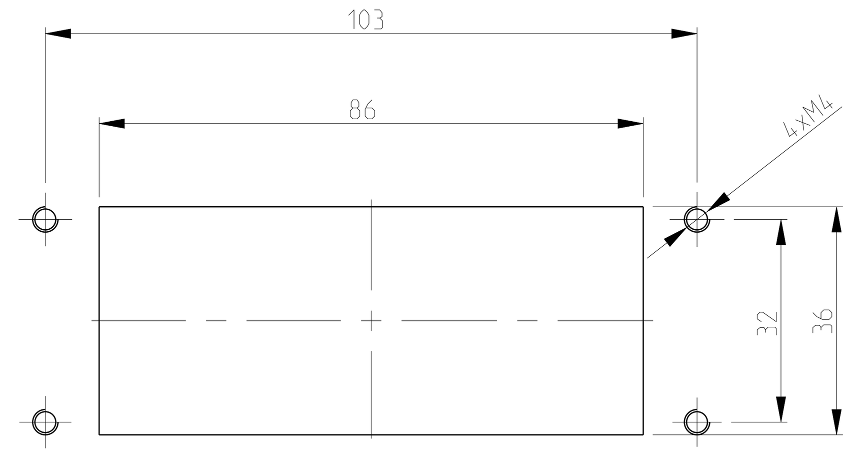

PN 1-6,2-6 & 0-2

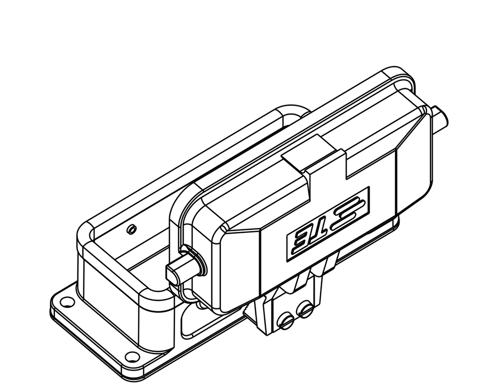

SCALE 1:2

PN 1-2,2-2,~~0-1,0-3~~ & ~~0-5~~

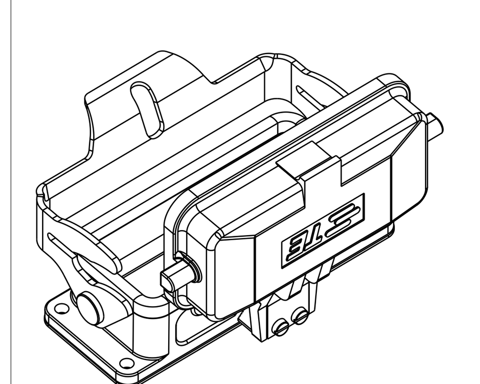

SCALE 1:2

PN 0-4

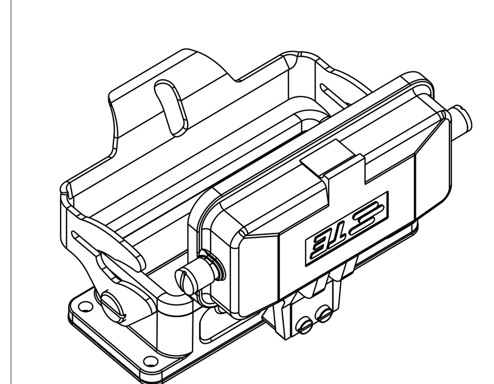

SCALE 1:2

PN 0-4

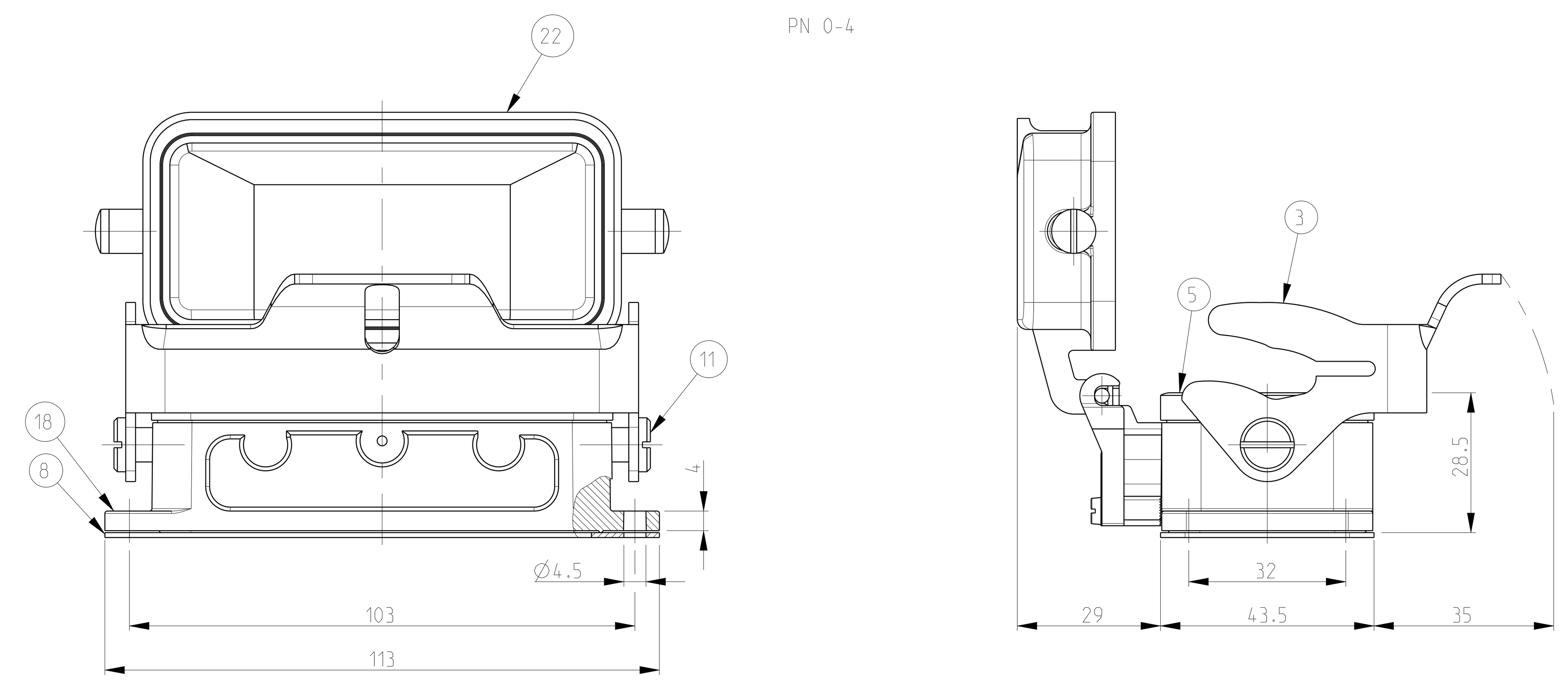

0-5 (OBSOLETE)	0-4 (OBSOLETE)	0-3 (OBSOLETE)	0-2	0-1 (OBSOLETE)	2-6	1-6 (OBSOLETE)	2-2	1-2	DESCRIPTION	MATERIAL	SURFACE	COLOR	ITEM NO	REMARKS
	1								Cover HB	Aluminium		Grey	22	Neutral
1		1							Flange Seal	Neoprene		Black	21	Conductive
1									Cover HB-EMV	Aluminium	SEE NOTE △2	Black	20	
1									Surface mounted housing bottom entry HB-EMV	Aluminium	SEE NOTE △2	Black	19	
	1								Surface mounted housing bottom entry HB	Aluminium		Grey	18	Neutral
1		1							Profile Seal	Neoprene		Black	17	Conductive
		1							Cover HB-EMV	Aluminium	SEE NOTE △2	Without varnish	16	
		1							Surface mounted housing bottom entry HB-EMV	Aluminium	SEE NOTE △2	Without varnish	15	
				1					Cover HB	Aluminium		Red	14	
				1					Surface mounted housing bottom entry HB	Aluminium		Red	13	
		2					2		LB-Clip Positioner	Stainless Steel	Blank		12	
2	2			2				2	LB-Clip Positioner	Steel	Zinc Plated	Blue	11	
					4				VS-Clip Bolt	Stainless Steel	Blank		10	
			4			4			VS-Clip Bolt	Steel	Zinc Plated	Blue	9	
	1		1	1	1	1	1	1	Flange Seal	Neoprene		Black	8	
					1		1		Cover HB-K	Aluminium	Aluminium Oxide	Black	7	
			1			1		1	Cover HB	Aluminium		Grey	6	
	1		1	1	1	1	1	1	Profile Seal	Neoprene		Black	5	
		1					1		LB-Side Clip	Stainless Steel	Blank		4	
1	1			1				1	LB-Side Clip	Steel	Zinc Plated	Blue	3	
					1		1		Surface mounted housing bottom entry HB-K	Aluminium	Aluminium Oxide	Black	2	
			1			1		1	Surface mounted housing bottom entry HB	Aluminium		Grey	1	

△5 (0-2)

ORDERING TEXT

- 1-2: HB.16.AGD-LB
- 2-2: HB-K.16.AGD-LB
- 1-6: HB.16.AGD
- 2-6: HB-K.16.AGD
- 0-1: ~~HB.16.AGD-LB~~
- 0-2: HB.16.AGD.KM
- 0-3: ~~HB-EMV.16.AGD-LB~~
- 0-4: HB.16.AGD-LB
- 0-5: ~~HB-EMV.16.AGD-LB~~

THIS DRAWING IS A CONTROLLED DOCUMENT.

DWN	Schneider 13.04.2000
CHK	Schweiger 13.04.2000
APVD	- -
PRODUCT SPEC	-
APPLICATION SPEC	-
WEIGHT	-
DIMENSIONS:	mm
TOLERANCES UNLESS OTHERWISE SPECIFIED:	n.ISO 8015; n.ISO 2768-mH-E; n.DIN 16901-120; 0 PLC ±; 1 PLC ±; 2 PLC ±; 3 PLC ±; 4 PLC ±; ANGLES ±
MATERIAL	
FINISH	

TE Connectivity

NAME: Surface Mounted Housing Bottom Entry
HB.16.AGD

SIZE	CAGE CODE	DRAWING NO	RESTRICTED TO
A1	00779	C-1102305	

CUSTOMER DRAWING

SCALE 1:1 | SHEET 1 OF 1 | REV C4