THIS DRAWING IS UNPUBLISHED. RELEASED FOR PUBLICATION 1997
© COPYRIGHT 1997 BY TYCO ELECTRONICS CORPORATION. ALL RIGHTS RESERVED.

LOC	DIST
A1	–

REVISIONS

P	LTR	DESCRIPTION	DATE	DWN	APVD
	A5	ECR-10-017493	01FEB2011	SR	AR

PN 1-6

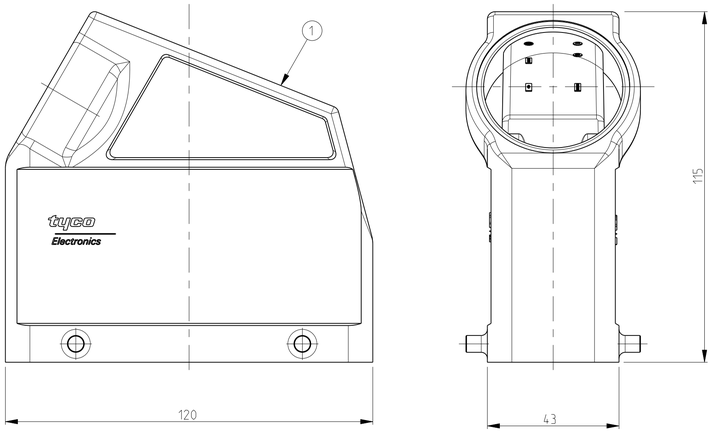

PN 2-6

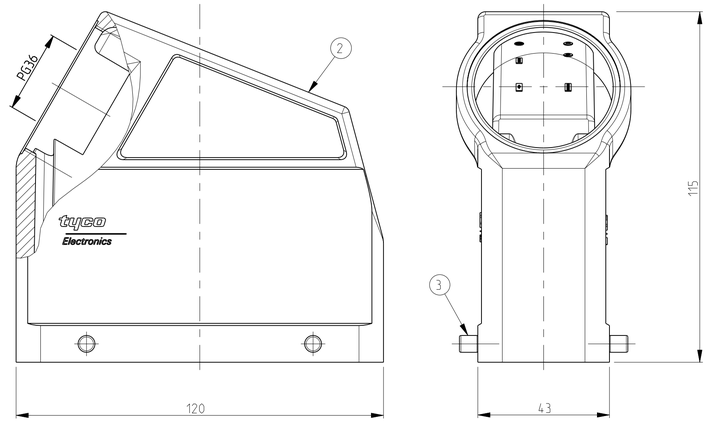

PN 2-1 & 1-1

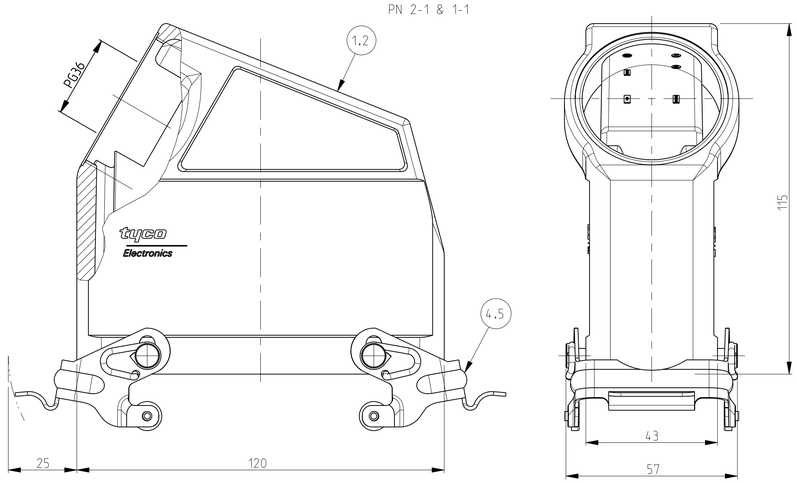

PN 1-7

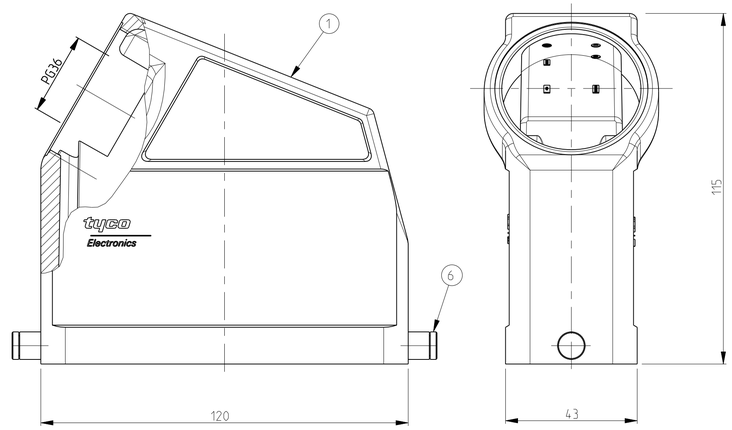

PN 2-7

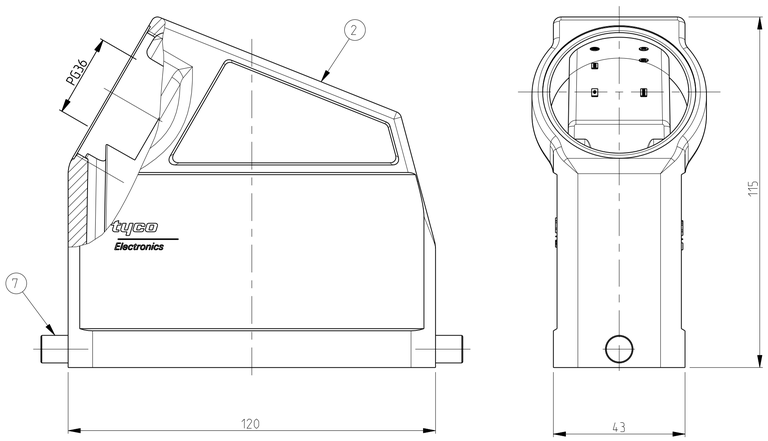

PN 2-3 & ~~1-3~~

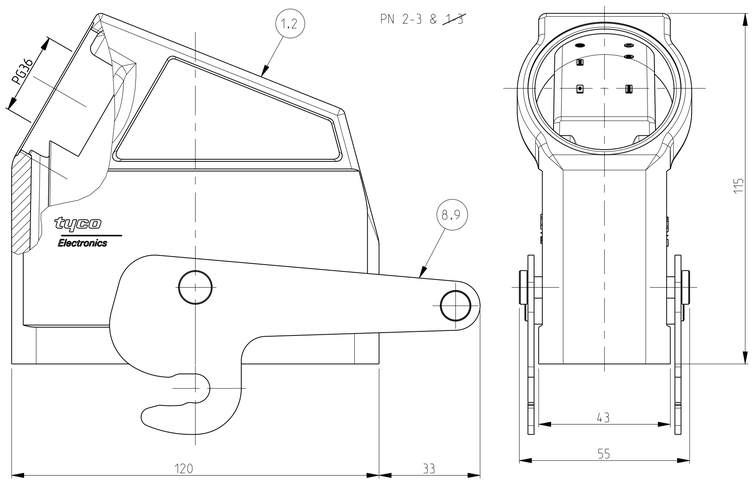

NOTES

1 Material: Housing: aluminium diecasting alloy

2 Surface:- Powder varnish grey
-Varnish black

3 Varnish on the inside not necessary

4 Packaging for all part number
Quantity 5 pieces

PN 1-6

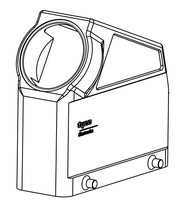

SCALE 1:2

PN 2-6

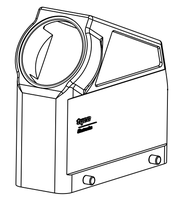

SCALE 1:2

PN 2-1 & 1-1

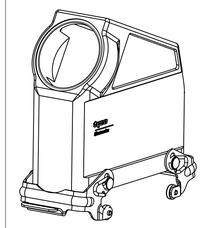

SCALE 1:2

PN 1-7

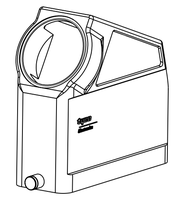

SCALE 1:2

PN 2-7

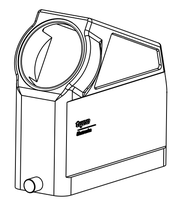

SCALE 1:2

PN 2-3 & 1-3

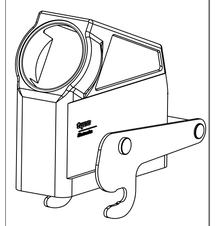

SCALE 1:2

OBSOLETE

2-3	1-3	2-7	1-7	2-1	1-1	2-6	1-6	DESCRIPTION	MATERIAL	SURFACE	COLOR	ITEM NO	NOTES
1								ZB-Central clip	Stainless Steel			9	
	1							ZB-Central clip	Steel	Zinc plated	Blue	8	
		2						LB-Clip bolt	Stainless Steel			7	
			2					LB-Clip bolt	Steel	Zinc plated	Blue	6	
				2				VS-Locking Clip	Stainless Steel			5	
					2			VS-Locking Clip	Steel	Zinc plated	Blue	4	
						4		VS-Clip bolt	Stainless Steel			3	
1		1		1		1		HD-KF K Hood	Aluminium	Aluminium oxide	Black	2	
	1		1		1		1	HD-KF Hood	Aluminium		Grey	1	

ORDERING TEXT

HD-KF.64.STS.1.36.G
HD-KF/K.64.STS.1.36.G
HD-KF.64.STS-VS.1.36.G
HD-KF/K.64.STS-VS.1.36.G
HD-KF.64.STS-GR.1.36.G
HD-KF/K.64.STS-GR.1.36.G
~~HD-KF-Z.64.STS-ZB.1.36.G~~ OBSOLETE
HD-KF/K-Z.64.STS-ZB.1.36.G

THIS DRAWING IS A CONTROLLED DOCUMENT FOR TYCO ELECTRONICS CORPORATION. IT IS SUBJECT TO CHANGE AND THE CONTROLLING ENGINEERING ORGANIZATION SHOULD BE CONTACTED FOR THE LATEST REVISION.

DIMENSIONS: mm

TOLERANCES UNLESS OTHERWISE SPECIFIED:
n.ISO 2768-mK
s.ISO 2768-mK-E
r.DIN 16901-SG
0 PLC ±
1 PLC ±
2 PLC ±
3 PLC ±
4 PLC ±
ANGLES ±

MATERIAL

FINISH

DWN	Schneider	23.07.03
CHK	Schweiger	23.07.03
APVD	–	
PRODUCT SPEC	–	
APPLICATION SPEC	–	
WEIGHT	–	

Tyco Electronics

Tyco Electronics, AMP GmbH
D-53819, Neunkirchen Germany

NAME
HOOD
HD-KF.64.STS.1.36.G
–

SIZE	CAGE CODE	DRAWING NO	RESTRICTED TO
A1	00779	C-1102408	–

CUSTOMER DRAWING

SCALE	SHEET	OF	REV
1:1	1	1	A5

AMP 4805 REV 31MAR2000

Pro/ENGINEER DRAWING