© – TE Connectivity. All Rights Reserved.

REVISIONS					
P	LTR	DESCRIPTION	DATE	DWN	APVD
	AD	REVISED PER ECO-20-004941	09APR2020	SY	HL

1. GOLD PLATE .00076[.000030] MIN. THICK OVER NICKEL UNDERPLATE PER QQ-N-290
2. NICKEL PL .00127[.000050] MIN THK PER QQ-N-290
3. SOLDER PL .00254[.000100] MIN THK
4. STAMPED P/N & DATE CODE
5. OPTIONAL: KEYING PLUG FOR INTERCONTACT KEYING IS 118982-1
6. OPTIONAL: CARD GUIDE (BASE NO 117169)
7. ALL PARTS ASSEMBLED IN MEXICO MUST BE STAMPED "ASSY IN MEXICO". THE WORD "MEXICO" CAN BE SUBSTITUTED ONLY WHERE PART SIZE PROHIBITS STAMPING "ASSY IN MEXICO", INK PER 115-9009, APPROX WHERE SHOWN, SIDE OPTIONAL
8. ACTION PIN REQUIRES 2.13[.084] MIN THK PC BOARD

REQUIRED HOLE DIAMETER TOLERANCES FOR COMPLIANT SECTION							
REQ'D DRILL SIZE	HOLE DIA ±.03[.001]	PLATING THICKNESS		HOLE DIAMETER		COPPER HARDNESS (KNOOP)	PAD DIA MIN
		COPPER	TIN/LEAD	AFTER PLATING	AFTER REFLOW		
1.15mm	1.15 [.0453]	0.03-0.08 [.001-.003]	0.008 MIN [.0003] MIN	0.94-1.09 [.037-.043]	0.914-1.09 [.0036-.043]	150 MAX	1.57 [.062]
1.15mm	1.15 [.0453]	NOT PLATED THRU					1.65 [.065]

9. MATERIAL: HOUSING- VALOX 420 SEO, COLOR - BLACK, CONTACT- PHOSPHOR BRONZE
10. SOLDER PL .00254[.000100] MIN. THK. MATTE TIN PLATE
11. OBSOLETE PARTS: OBSOLETE CIS STREAMLINING PER D.RENAUD/D.SINISI

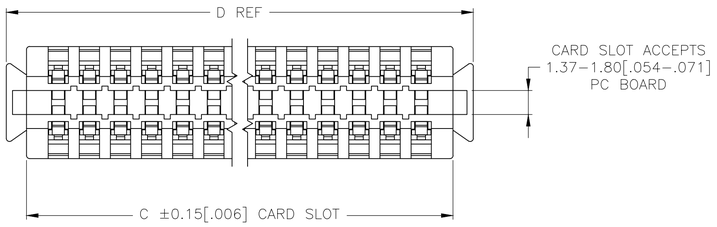

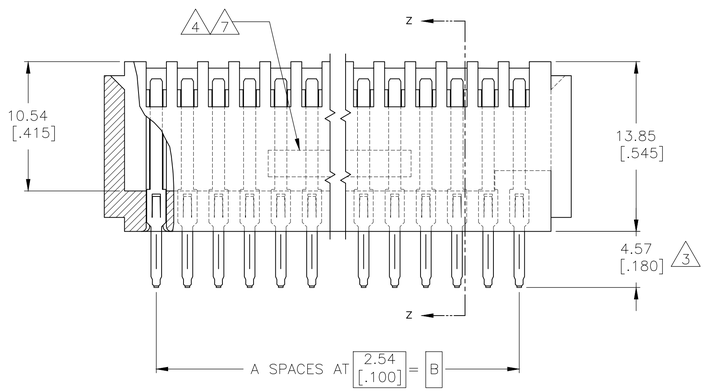

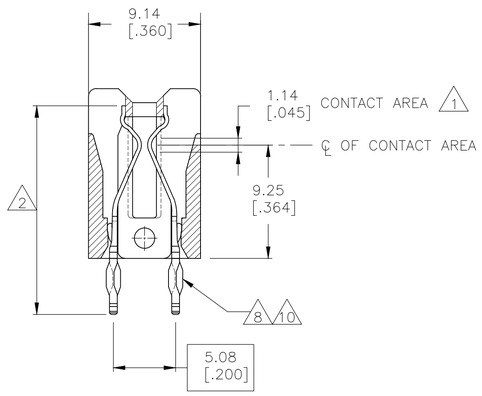

SECTION Z-Z

	D	C	B	A	POSN	PART NUMBER
	158.34 [6.234]	155.04 [6.104]	149.86 [5.900]	59	60	10 9-119738-6
11	145.64 [5.734]	142.34 [5.604]	137.16 [5.400]	54	55	~~10 9-119738-1~~
	132.94 [5.234]	129.64 [5.104]	124.46 [4.900]	49	50	~~10 8-119738-6~~
OBSOLETE	107.54 [4.234]	104.24 [4.104]	99.06 [3.900]	39	40	~~10 7-119738-6~~
OBSOLETE	~~97.38 [3.834]~~	~~94.08 [3.704]~~	~~88.90 [3.500]~~	~~35~~	~~36~~	~~10 7-119738-2~~
11	87.22 [3.434]	83.92 [3.304]	78.74 [3.100]	31	32	~~10 6-119738-8~~
OBSOLETE	84.68 [3.334]	81.38 [3.204]	76.20 [3.000]	30	31	~~10 6-119738-7~~
	82.14 [3.234]	78.84 [3.104]	73.66 [2.900]	29	30	10 6-119738-6
11 OBSOLETE	77.06 [3.034]	73.76 [2.904]	68.58 [2.700]	27	28	~~10 6-119738-4~~
	69.44 [2.734]	66.14 [2.604]	60.96 [2.400]	24	25	10 6-119738-1
11 OBSOLETE	66.90 [2.634]	63.60 [2.504]	58.42 [2.300]	23	24	~~10 6-119738-0~~
	61.82 [2.434]	58.52 [2.304]	53.34 [2.100]	21	22	~~10 5-119738-8~~
	56-74 [2.234]	53.44 [2.104]	48.26 [1.900]	19	20	10 5-119738-6
	51.66 [2.034]	48.36 [1.904]	43.18 [1.700]	17	18	10 5-119738-4
	44.04 [1.734]	40.74 [1.604]	35.56 [1.400]	14	15	10 5-119738-1
OBSOLETE	~~158.34 [6.234]~~	~~155.04 [6.104]~~	~~149.86 [5.900]~~	~~59~~	~~60~~	~~4-119738-6~~
						4-119738-5
						4-119738-4
						4-119738-3
						4-119738-2
11 OBSOLETE	145.64 [5.734]	142.34 [5.604]	137.16 [5.400]	54	55	~~4-119738-1~~
						4-119738-0
						3-119738-9
						3-119738-8
						3-119738-7
OBSOLETE	~~132.94 [5.234]~~	~~129.64 [5.104]~~	~~124.46 [4.900]~~	~~49~~	~~50~~	~~3-119738-6~~
						3-119738-5
OBSOLETE	~~127.86 [5.034]~~	~~124.56 [4.904]~~	~~119.38 [4.700]~~	~~47~~	~~48~~	3-119738-4
						3-119738-3
						3-119738-2
						3-119738-0
						3-119738-0
SUPERSEDED	~~115.16 [4.534]~~	~~111.86 [4.404]~~	~~106.68 [4.200]~~	~~42~~	~~43~~	~~2-119738-9~~
						2-119738-8
						2-119738-7
	107.54 [4.234]	104.24 [4.104]	99.06 [3.900]	39	40	2-119738-6
						2-119738-5
						2-119738-4
SUPERSEDED	~~99.92 [3.934]~~	~~96.62 [3.804]~~	~~91.44 [3.600]~~	~~36~~	~~37~~	~~2-119738-3~~
	97.38 [3.834]	94.08 [3.704]	88.90 [3.500]	35	36	2-119738-2
OBSOLETE	~~94.84 [3.734]~~	~~91.54 [3.604]~~	~~86.36 [3.400]~~	~~34~~	~~35~~	2-119738-1
						2-119738-0
						1-119738-9
OBSOLETE	87.22 [3.434]	83.92 [3.304]	78.74 [3.100]	31	32	~~1-119738-8~~
11 OBSOLETE	84.68 [3.334]	81.38 [3.204]	76.20 [3.000]	30	31	~~1-119738-7~~
OBSOLETE	~~82.14 [3.234]~~	~~78.84 [3.104]~~	~~73.66 [2.900]~~	~~29~~	~~30~~	~~1-119738-6~~
						1-119738-5
11 OBSOLETE	77.06 [3.034]	73.76 [2.904]	68.58 [2.700]	27	28	~~1-119738-4~~
						1-119738-3
						1-119738-2
	69.44 [2.734]	66.14 [2.604]	60.96 [2.400]	24	25	1-119738-1
11 OBSOLETE	66.90 [2.634]	63.60 [2.504]	58.42 [2.300]	23	24	~~1-119738-0~~
						119738-9
	61.82 [2.434]	58.52 [2.304]	53.34 [2.100]	21	22	119738-8
						119738-7
OBSOLETE	~~56-74 [2.234]~~	~~53.44 [2.104]~~	~~48.26 [1.900]~~	~~19~~	~~20~~	~~119738-6~~
						119738-5
OBSOLETE	~~51.66 [2.034]~~	~~48.36 [1.904]~~	~~43.18 [1.700]~~	~~17~~	~~18~~	~~119738-4~~
						119738-3
						119738-2
OBSOLETE	~~44.04 [1.734]~~	~~40.74 [1.604]~~	~~35.56 [1.400]~~	~~14~~	~~15~~	~~119738-1~~

THIS DRAWING IS A CONTROLLED DOCUMENT.

DIMENSIONS: mm [INCHES]

TOLERANCES UNLESS OTHERWISE SPECIFIED:
0 PLC ± –
1 PLC ± –
2 PLC ± –
3 PLC ± 0.25 [.010]
4 PLC ± –
ANGLES ± –

MATERIAL 9

FINISH 1 2 3

DWN R. BROWN 29NOV00
CHK M. MILLER 29NOV00
APVD M. MILLER 29NOV00

PRODUCT SPEC –
APPLICATION SPEC –

WEIGHT 0.000000

CUSTOMER DRAWING

TE Connectivity

NAME CONNECTOR, AMP PACE .100 X .200 – –

SIZE	CAGE CODE	DRAWING NO	RESTRICTED TO
A1	00779	C-119738	–

SCALE 4:1 SHEET 1 OF 1 REV AD