© 2020 TE Connectivity. All Rights Reserved.

REVISIONS					
P	LTR	DESCRIPTION	DATE	DWN	APVD
	J10	REV PER ECN-23-199650	10MAR2023	SMR	DM
	J11	REV PER ECN-23-217950	16JUN2023	LM	HC
	J12	REV PER ECN-23-238957	13NOV2023	SR	HC
	J13	REV PER ECN-24-283737	11SEP2024	AM	HC

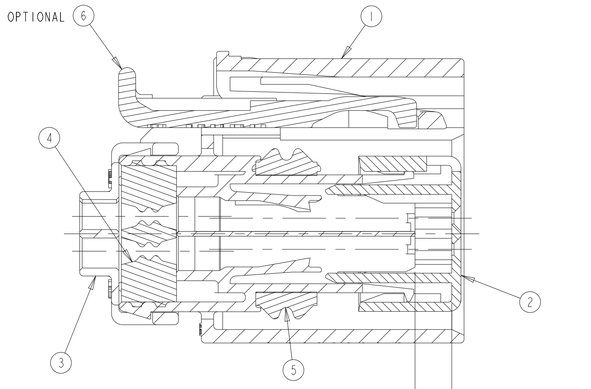

SECTION A-A
SHOWN WITH TPA
AND CPA (OPTIONAL) IN
THEIR PRE-ASSEMBLED POSITION
(DELIVERY CONDITION)

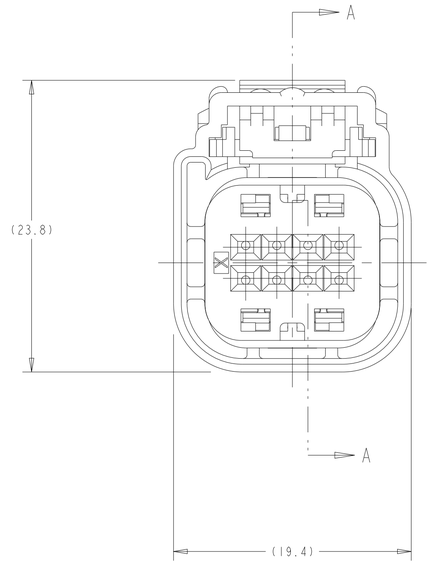

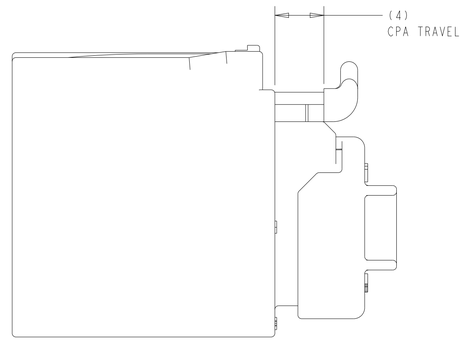

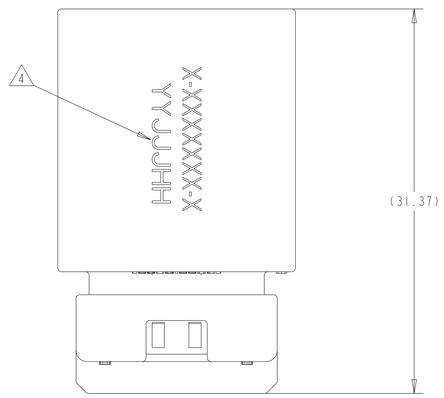

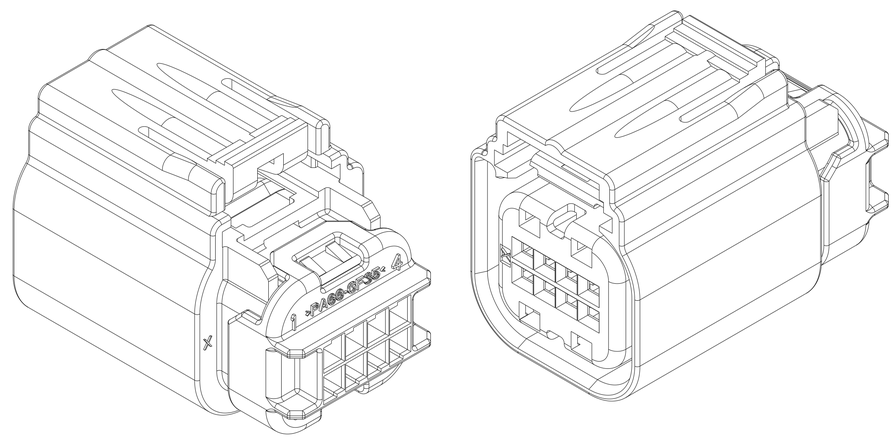

KEYING OPTION "B" SHOWN
SEE NOTE 5 FOR APPLICABLE
HEADER INTERFACE INFORMATION

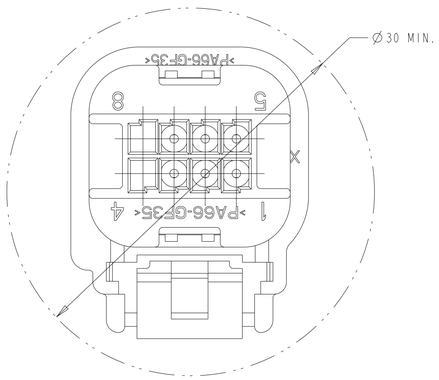

MINIMUM FEED THRU CONDITION
WITH 1mm CLEARANCE ALL AROUND

COVER CHART

1	2	3	4	5	6	7	8	TERMINAL POSITION / ASSEMBLY PART NUMBER
					6	7	8	1-1411001-9
								3-1411001-9
1	2	3						1-1411001-8
								3-1411001-8
1	2							1-1411001-7
								3-1411001-7
1	2		4					1-1411001-6
								3-1411001-6
				5	6			1-1411001-5
								2-1411001-0
						7		1-1411001-4
								3-1411001-4
					6	7		1-1411001-3
								3-1411001-3
1	2	3	4					1-1411001-2
				5	6	7		1-1411001-1
								3-1411001-1
		3						1-1411001-0
				5	6	7	8	1411001-9
								2-1411001-9
		3	4					1411001-8
								2-1411001-8
			4					1411001-7
								2-1411001-7
		3	4				8	1411001-5
								2-1411001-5
			4				8	1411001-2
								2-1411001-2
								1411001-6
								1411001-1

CAVITIES WITH A NUMBER INDICATES CLOSED TERMINAL HOLE LOCATIONS

BLANK CAVITIES INDICATE OPEN TERMINAL HOLE LOCATIONS

1. APPLICABLE TERMINAL PART NUMBERS (SOLD SEPARATELY):
   FOR TIN AND SILVER APPLICATIONS: 1393367 AND 1393366.
   FOR GOLD APPLICATIONS: 1393365 AND 1393364.
   FOR TERMINATION AND REELING DIRECTION
   SEE DRAWINGS 1393367, 1393366, 1393365, AND 1393364.
2. COMPATIBLE WIRE SIZES FOR MAT SEAL DESIGN 1.19 TO 2.06 O.D.
   (22-18 AWG, 0.35-0.75 mm^2)
3. TPA IS SHIPPED IN PRE-LOADED POSITION. SOME MAY BECOME FULLY SEATED DURING SHIPPING. USE TYCO INSTRUCTION SHEET 408-10128 TO REPOSITION TPA TO PRE-LOADED POSITION.
4. TE CONNECTIVITY ASSEMBLY PART NUMBER (X-XXXXXXX-X) AND TRACEABILITY CODE (YY = TWO DIGIT YEAR, JJJ = JULIAN DAY, HH = TWO DIGIT MILITARY HOUR) ARE PRINTED IN THIS LOCATION.
5. APPLICABLE HEADER INTERFACE DRAWING 1488342.
6. ASSEMBLIES ARE BULK PACKAGED.
7. OPTIONAL CPA IS SHIPPED IN PRE-LOADED POSITION.
8. PART NUMBER 1411001-2 SHOWN.

3-1411001-9	3-1411001-8	3-1411001-7	3-1411001-6	3-1411001-4	3-1411001-3	3-1411001-1	2-1411001-9	2-1411001-8	2-1411001-7	2-1411001-5	2-1411001-2	2-1411001-0	1-1411001-9	1-1411001-8	1-1411001-7	1-1411001-6	1-1411001-5	1-1411001-4	1-1411001-3	1-1411001-2	1-1411001-1	1-1411001-0	1411001-9	1411001-8	1411001-7	1411001-6	1411001-5	1411001-2	1411001-1	ITEM	DESCRIPTION	COLOR	MATERIAL
																														<---- ASSEMBLY PART NUMBERS			
1	1	1	1	1	1	1	1	1	1	1	1	-	-	-	-	-	1	-	-	1	-	1	-	-	-	1	-	-	-	6	CPA	RED	PBT-GF15
1	1	1	1	1	1	1	1	1	1	1	1	1	1	1	1	1	1	1	1	1	1	1	1	1	1	1	1	1	1	5	PERIMETER SEAL	LIGHT GREEN	SILICONE
1	1	1	1	1	1	1	1	1	1	1	1	1	1	1	1	1	1	1	1	1	1	1	1	1	1	1	1	1	1	4	GROMMET	BROWN	SILICONE
1	1	1	1	1	1	1	1	1	1	1	1	1	1	1	1	1	1	1	1	1	1	1	1	1	1	1	1	1	1	3	GROMMET COVER	BLACK	PA66-GF35
1	1	1	1	1	1	1	1	1	1	1	1	1	1	1	1	1	1	1	1	1	1	1	1	1	1	1	1	1	1	2	TPA	RED	PBT+PC-GF30
1	1	1	1	1	1	1	1	1	1	1	1	1	1	1	1	1	1	1	1	1	1	1	1	1	1	1	1	1	1	1	PLUG, KEY B	BLACK	PA66-GF35
QUANTITY																														ITEM	DESCRIPTION	COLOR	MATERIAL

THIS DRAWING IS A CONTROLLED DOCUMENT.

DIMENSIONS: mm

TOLERANCES UNLESS OTHERWISE SPECIFIED:
0 PLC ±-
1 PLC ±0.3
2 PLC ±0.10
3 PLC ±-
4 PLC ±-
ANGLES ±3°

MATERIAL - -
FINISH - -

DWN M. HITCHCOCK 01OCT2001
CHK M. FORISKA 12NOV2001
APVD A. SHUMAN 12NOV2001
PRODUCT SPEC -
APPLICATION SPEC 114-13150
WEIGHT -

TE Connectivity

NAME 2X4
SEALED, FEMALE PLUG ASSEMBLY

SIZE A1 | CAGE CODE 00779 | DRAWING NO C-1411001 | RESTRICTED TO

CUSTOMER DRAWING | SCALE 4:1 | SHEET 1 OF 1 | REV J13

4805 (3/13)