THIS DRAWING IS UNPUBLISHED. RELEASED FOR PUBLICATION 09.01.2001
© COPYRIGHT 20 BY AMP INCORPORATED. ALL RIGHTS RESERVED.

LOC	DIST
A1	

REVISIONS

P	LTR	DESCRIPTION	DATE	DWN	APVD
	A4	SR20-0004-03, neue Kodierung dazu/ADDED NEW CODINGDS	28.01.03	BK	BK
	A5	SR20-0029-04	26.03.04	SVN	JVC
	A6	ECR-06-014319	19.06.06	SVN	JVC
	A7	ECR-18-005108	17APR2018	MSA	KK

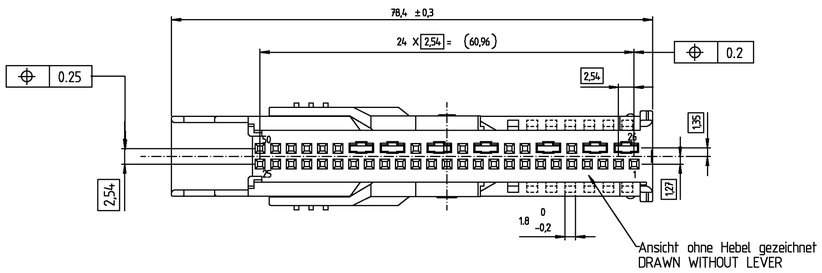

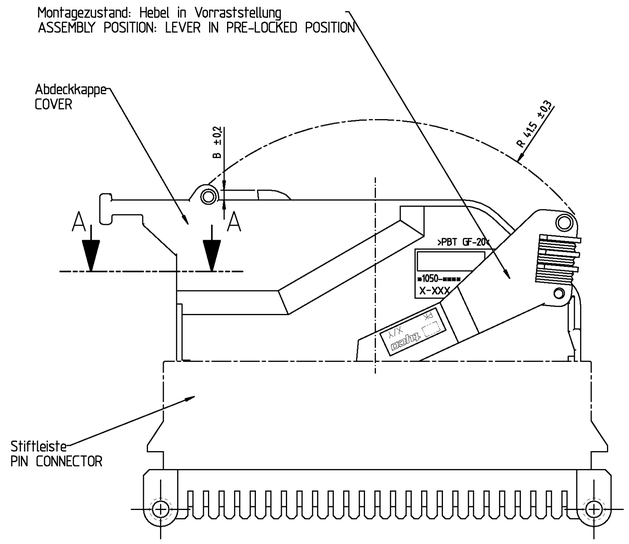

Montagezustand / ASSEMBLY POSITION

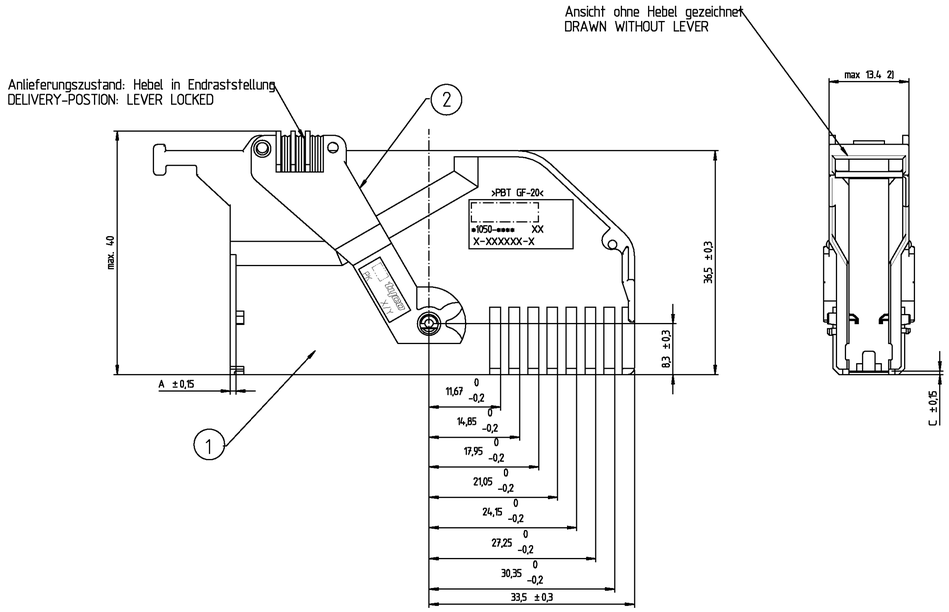

Schnitt A-A
M 5:1

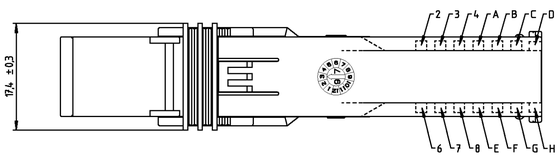

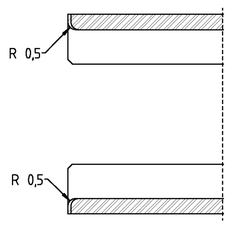

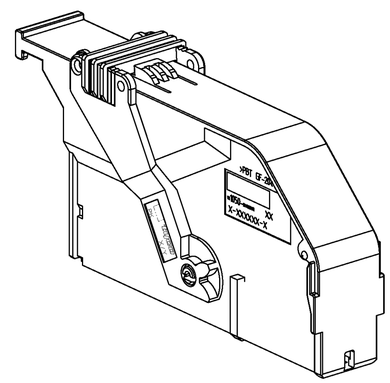

	Ausfuehrung 1 VERSION 1	Ausfuehrung 2 VERSION 2
Mass A DIMENSION A	0,9	0,7
Mass B DIMENSION B	1.6	1,9
Mass C DIMENSION C	0,6	0,8

Diese TE -Zeichnung ersetzt EC-Zeichnung V23540-M1050-S52*-*-7427
THIS TE -DRAWING REPLACED EC-DRAWING V23540-M1050-S52*-*-7427

Teile Nr. nach Mittelschrift DIN 1451
PART NO. ACC. MEDIUM LETTERING DIN 1451

2) Abdeckkappe Maß im Hebelbereich /
COVER DIMENSION IN LEVER AREA

1) Regenerataanteil / RECYCLED MATERIAL: max. 25%
Einfärbung mit Liquidfarbe oder Masterbatch zulaessig /
LIQUID COLOR OR MASTERBATCH MAY BE USED

*) Längen: DIN 16901-130; Winkel, Form u. Lage:DIN ISO 2768-mH
LENGTH: DIN 16901-130; ANGLES, FORM, POS.: DIN ISO 2768-mH

Maßgebend ist der deutsche Text.

ONLY THE GERMAN-LANGUAGE VERSION SHALL BE BINDING.

	TE Assy-PN TE ASSY-PN	TE -Rev. TE -REV	EC Bestell-Nr. EC. CODE-NO.	Kodierung CODING	Beschreibung DESCRIPTION	Farbe COLOR	Werkstoff MATERIAL	Item-Nr. ITEM NO.	Gewicht WEIGHT	Ausführung VERSION	ungeschaltete Ausführung CONVERTED VERSION	Datum der Umstellung DATE OF CONVERSION
	1-1411133-9	A	---	B - B	Hebel/LEVER Abdeckkappe/COVER	reinorange/PURE ORANGE RAL 2004 rehbraun/FAWN BROWN GREEN RAL 8007	PBT GF20 PBT GF20	2 1	12 g	2	-	-
A7 OBSOLETE	~~1-1411133-8~~	A	---	2 - E	Hebel/LEVER Abdeckkappe/COVER	reinorange/PURE ORANGE RAL 2004 platinmagnan /PLATINA GREEN RAL 6000	PBT GF20 PBT GF20	2 1	12 g	2	-	-
	1-1411133-7	A	---	A - 6	Hebel/LEVER Abdeckkappe/COVER	reinorange/PURE ORANGE RAL 2004 braunbeige /BROWN BEIGE RAL 1011	PBT GF20 PBT GF20	2 1	12 g	2	-	-
	1-1411133-6	A	---	2 - F	Hebel/LEVER Abdeckkappe/COVER	reinorange/PURE ORANGE RAL 2004 beigegrau/BEIGE GREY RAL 7006	PBT GF20 PBT GF20	2 1	12 g	2	-	-
	1-1411133-4	A	V23540-M1050-S581	E - F	Hebel/LEVER Abdeckkappe/COVER	reinorange/PURE ORANGE RAL 2004 schiefergrau/SLATE GREY RAL 7015	PBT GF20 PBT GF20	2 1	12 g	2	-	-
	1-1411133-3	A	V23540-M1050-S605	1 - G	Hebel/LEVER Abdeckkappe/COVER	reinorange/PURE ORANGE RAL 2004 blassbraun/PALE BROWN RAL 8027	PBT GF20 PBT GF20	2 1	12 g	2	-	-
	1-1411133-2	A	V23540-M1050-S604	C - S	Hebel/LEVER Abdeckkappe/COVER	reinorange/PURE ORANGE RAL 2004 grauoliv/GREY OLIVE RAL 6006	PBT GF20 PBT GF20	2 1	12 g	2	-	-
	1-1411133-1	A	V23540-M1050-S603	1 - H	Hebel/LEVER Abdeckkappe/COVER	reinorange/PURE ORANGE RAL 2004 stahlblau/STEEL BLUE RAL 5011	PBT GF20 PBT GF20	2 1	12 g	2	-	-
	1-1411133-0	A	V23540-M1050-S602	D - S	Hebel/LEVER Abdeckkappe/COVER	reinorange/PURE ORANGE RAL 2004 rotbraun/RED BROWN RAL 8012	PBT GF20 PBT GF20	2 1	12 g	2	-	-
	1-1411133-9	A	V23540-M1050-S601	1 - S	Hebel/LEVER Abdeckkappe/COVER	reinorange/PURE ORANGE RAL 2004 currygelb/CURRY RAL 1027	PBT GF20 PBT GF20	2 1	12 g	2	-	-
	14.11133-8	A	V23540-M1050-S600	2 - 7	Hebel/LEVER Abdeckkappe/COVER	reinorange/PURE ORANGE RAL 2004 platingrau/PLATINUM GREY RAL 7036	PBT GF20 PBT GF20	2 1	12 g	2	-	-
	14.11133-3	A	V23540-M1050-S579	F - G	Hebel/LEVER Abdeckkappe/COVER	reinorange/PURE ORANGE RAL 2004 rotbraun/RED BROWN RAL 8012	PBT GF20 PBT GF20	2 1	12 g	2	-	-
	14.11133-2	A	V23540-M1050-S578	B - C	Hebel/LEVER Abdeckkappe/COVER	reinorange/PURE ORANGE RAL 2004 verkehrspurpur/TRAFFIC PURPLE RAL 4006	PBT GF20 PBT GF20	2 1	12 g	2	-	-
	14.11133-1	A	V23540-M1050-S577	A - B	Hebel/LEVER Abdeckkappe/COVER	reinorange/PURE ORANGE RAL 2004 pastellorange/PASTEL ORANGE BLUE RAL 1003	PBT GF20 PBT GF20	2 1	12 g	2	-	-
	14.11133-7	A	V23540-M1050-S576	3 - 6	Hebel/LEVER Abdeckkappe/COVER	reinorange/PURE ORANGE RAL 2004 lichtgrau/LIGHT GREY RAL 7035	PBT GF20 PBT GF20	2 1	12 g	2	-	-
	14.11133-6	A	V23540-M1050-S575	2 - 8	Hebel/LEVER Abdeckkappe/COVER	reinorange/PURE ORANGE RAL 2004 helltrosa/LIGHT PINK RAL 3015	PBT GF20 PBT GF20	2 1	12 g	2	-	-
	14.11133-5	A	V23540-M1050-S574	4 - 6	Hebel/LEVER Abdeckkappe/COVER	reinorange/PURE ORANGE RAL 2004 lasilila/BLUE LILAC RAL 4005	PBT GF20 PBT GF20	2 1	12 g	2	-	-
A7 OBSOLETE	~~8-1393448-2~~	A	V23540-M1050-S573	2 - E	Hebel/LEVER Abdeckkappe/COVER	reinorange/PURE ORANGE RAL 2004 enzianviolett/HEATHER VIOLET RAL 4003	PBT GF20 PBT GF20	2 1	12 g	2	-	-
A7 OBSOLETE	~~9-1393448-1~~	A	V23540-M1050-S572	A - 6	Hebel/LEVER Abdeckkappe/COVER	reinorange/PURE ORANGE RAL 2004 grauweiss/GREY WHITE RAL 9002	PBT GF20 PBT GF20	2 1	12 g	2	-	-
	9-1393448-0	A	V23540-M1050-S571	2 - F	Hebel/LEVER Abdeckkappe/COVER	reinorange/PURE ORANGE RAL 2004 laubgrün/LEAF GREEN RAL 6002	PBT GF20 PBT GF20	2 1	12 g	2	-	-
A7 OBSOLETE	~~8-1393448-9~~	A	V23540-M1050-S570	B - 6	Hebel/LEVER Abdeckkappe/COVER	reinorange/PURE ORANGE RAL 2004 curry gelb/CURRY RAL 1027	PBT GF20 PBT GF20	2 1	12 g	2	-	-
	8-1393448-8	A	V23540-M1050-S569	2 - G	Hebel/LEVER Abdeckkappe/COVER	reinorange/PURE ORANGE RAL 2004 türkisblau/TURQUOISE BLUE RAL 5018	PBT GF20 PBT GF20	2 1	12 g	2	-	-
	8-1393448-7	A	V23540-M1050-S568	C - 6	Hebel/LEVER Abdeckkappe/COVER	reinorange/PURE ORANGE RAL 2004 beige/BEIGE RAL 1001	PBT GF20 PBT GF20	2 1	12 g	2	-	-
	8-1393448-6	A	V23540-M1050-S567	2 - H	Hebel/LEVER Abdeckkappe/COVER	reinorange/PURE ORANGE RAL 2004 platingrau/PLATINUM GREY RAL 7036	PBT GF20 PBT GF20	2 1	12 g	2	-	-
	8-1393448-5	A	V23540-M1050-S566	D - 6	Hebel/LEVER Abdeckkappe/COVER	reinorange/PURE ORANGE RAL 2004 lehmbraun/CLAY BROWN RAL 8003	PBT GF20 PBT GF20	2 1	12 g	2	-	-
	8-1393448-4	A	V23540-M1050-S565	2 - 6	Hebel/LEVER Abdeckkappe/COVER	reinorange/PURE ORANGE RAL 2004 signalgrün/SIGNAL GREEN RAL 6032	PBT GF20 PBT GF20	2 1	12 g	2	-	-
	8-1393448-3	A	V23540-M1050-S564	3 - 8	Hebel/LEVER Abdeckkappe/COVER	reinorange/PURE ORANGE RAL 2004 verkehrsgelb/TRAFFIC YELLOW RAL 1023	PBT GF20 PBT GF20	2 1	12 g	2	-	-
	8-1393448-2	A	V23540-M1050-S563	4 - 7	Hebel/LEVER Abdeckkappe/COVER	reinorange/PURE ORANGE RAL 2004 lichtblau/LIGHT BLUE RAL 5012	PBT GF20 PBT GF20	2 1	12 g	2	-	-
	8-1393448-1	A	V23540-M1050-S562	3 - E	Hebel/LEVER Abdeckkappe/COVER	reinorange/PURE ORANGE RAL 2004 natur/NATURAL RAL ---	PBT GF20 PBT GF20	2 1	12 g	2	-	-
	8-1393448-0	A	V23540-M1050-S561	A - 7	Hebel/LEVER Abdeckkappe/COVER	reinorange/PURE ORANGE RAL 2004 tiefschwarz/JET BLACK RAL 9005	PBT GF20 PBT GF20	2 1	12 g	2	-	-
	7-1393448-9	A	V23540-M1050-S560	3 - F	Hebel/LEVER Abdeckkappe/COVER	reinorange/PURE ORANGE RAL 2004 reinorange/PURE ORANGE RAL 2004	PBT GF20 PBT GF20	2 1	12 g	2	-	-
A7 OBSOLETE	~~7-1393448-8~~	A	V23540-M1050-S559	B - 7	Hebel/LEVER Abdeckkappe/COVER	reinorange/PURE ORANGE RAL 2004 reinweiss/PURE WHITE RAL 9010	PBT GF20 PBT GF20	2 1	12 g	2	-	-
	4-1393448-4	A	V23540-M1050-S558	3 - G	Hebel/LEVER Abdeckkappe/COVER	reinorange/PURE ORANGE RAL 2004 purpurviolett/PURPLE VIOLET RAL 4007	PBT GF20 PBT GF20	2 1	12 g	1	2	08.05.2001
	4-1393448-3	A	V23540-M1050-S557	C - 7	Hebel/LEVER Abdeckkappe/COVER	reinorange/PURE ORANGE RAL 2004 verkehrspurpur/TRAFFIC PURPLE RAL 4006	PBT GF20 PBT GF20	2 1	12 g	1	2	08.05.2001
A7 OBSOLETE	~~4-1393448-2~~	A	V23540-M1050-S556	3 - H	Hebel/LEVER Abdeckkappe/COVER	reinorange/PURE ORANGE RAL 2004 blassgrünoliv/PALE GREEN RAL 6021	PBT GF20 PBT GF20	2 1	12 g	1	2	08.05.2001
	4-1393448-1	A	V23540-M1050-S555	D - 7	Hebel/LEVER Abdeckkappe/COVER	reinorange/PURE ORANGE RAL 2004 honiggelb/HONEY YELLOW RAL 1005	PBT GF20 PBT GF20	2 1	12 g	1	2	08.05.2001
	4-1393448-0	A	V23540-M1050-S554	3 - 7	Hebel/LEVER Abdeckkappe/COVER	reinorange/PURE ORANGE RAL 2004 olivgrau/OLIVE GREY RAL 7002	PBT GF20 PBT GF20	2 1	12 g	1	2	08.05.2001
	3-1393448-9	A	V23540-M1050-S553	4 - E	Hebel/LEVER Abdeckkappe/COVER	reinorange/PURE ORANGE RAL 2004 pastellgelb/PASTEL YELLOW RAL 1034	PBT GF20 PBT GF20	2 1	12 g	1	2	08.05.2001
A7 OBSOLETE	~~3-1393448-8~~	A	V23540-M1050-S552	A - 8	Hebel/LEVER Abdeckkappe/COVER	reinorange/PURE ORANGE RAL 2004 blaugrau/BLUE GREY RAL 7031	PBT GF20 PBT GF20	2 1	12 g	1	2	08.05.2001
	3-1393448-7	A	V23540-M1050-S551	4 - F	Hebel/LEVER Abdeckkappe/COVER	reinorange/PURE ORANGE RAL 2004 licht grüneu/LIGHT GREEN RAL 6027	PBT GF20 PBT GF20	2 1	12 g	1	2	08.05.2001
	3-1393448-6	A	V23540-M1050-S550	B - 8	Hebel/LEVER Abdeckkappe/COVER	reinorange/PURE ORANGE RAL 2004 taubenblau/PIGEON BLUE RAL 5014	PBT GF20 PBT GF20	2 1	12 g	1	2	08.05.2001
A7 OBSOLETE	~~3-1393448-5~~	A	V23540-M1050-S549	4 - G	Hebel/LEVER Abdeckkappe/COVER	reinorange/PURE ORANGE RAL 2004 pastellviolett/PASTEL VIOLET RAL 4009	PBT GF20 PBT GF20	2 1	12 g	1	2	08.05.2001
	3-1393448-4	A	V23540-M1050-S548	C - 8	Hebel/LEVER Abdeckkappe/COVER	reinorange/PURE ORANGE RAL 2004 ozeanblau/OCEAN BLUE RAL 5020	PBT GF20 PBT GF20	2 1	12 g	1	2	08.05.2001
	3-1393448-3	A	V23540-M1050-S547	4 - H	Hebel/LEVER Abdeckkappe/COVER	reinorange/PURE ORANGE RAL 2004 lachsrot/SALMON PINK RAL 3022	PBT GF20 PBT GF20	2 1	12 g	1	2	08.05.2001
A7 OBSOLETE	~~3-1393448-2~~	A	V23540-M1050-S546	D - 8	Hebel/LEVER Abdeckkappe/COVER	reinorange/PURE ORANGE RAL 2004 verkehrsblau/TRAFFIC BLUE RAL 5017	PBT GF20 PBT GF20	2 1	12 g	1	2	08.05.2001
A7 OBSOLETE	~~3-1393448-1~~	A	V23540-M1050-S545	4 - 8	Hebel/LEVER Abdeckkappe/COVER	reinorange/PURE ORANGE RAL 2004 verkehrsrot/TRAFFIC RED RAL 3020	PBT GF20 PBT GF20	2 1	12 g	1	2	08.05.2001
	3-1393448-0	A	V23540-M1050-S544	D - G	Hebel/LEVER Abdeckkappe/COVER	reinorange/PURE ORANGE RAL 2004 melonengelb/MELON YELLOW RAL 1028	PBT GF20 PBT GF20	2 1	12 g	1	2	08.05.2001
	2-1393448-9	A	V23540-M1050-S543	D - F	Hebel/LEVER Abdeckkappe/COVER	reinorange/PURE ORANGE RAL 2004 orangebraun/ORANGE BROWN RAL 8023	PBT GF20 PBT GF20	2 1	12 g	1	2	08.05.2001
A7 OBSOLETE	~~2-1393448-8~~	A	V23540-M1050-S542	B - H	Hebel/LEVER Abdeckkappe/COVER	reinorange/PURE ORANGE RAL 2004 opalgrün/OPAL GREEN RAL 6026	PBT GF20 PBT GF20	2 1	12 g	1	2	08.05.2001
	2-1393448-7	A	V23540-M1050-S541	F - H	Hebel/LEVER Abdeckkappe/COVER	reinorange/PURE ORANGE RAL 2004 ultramarinblau/ULTRAMARINE BLUE RAL 5002	PBT GF20 PBT GF20	2 1	12 g	1	2	08.05.2001
A7 OBSOLETE	~~2-1393448-6~~	A	V23540-M1050-S540	E - H	Hebel/LEVER Abdeckkappe/COVER	reinorange/PURE ORANGE RAL 2004 weissgrün/PASTEL GREEN RAL 6019	PBT GF20 PBT GF20	2 1	12 g	1	2	08.05.2001
	2-1393448-5	A	V23540-M1050-S539	E - G	Hebel/LEVER Abdeckkappe/COVER	reinorange/PURE ORANGE RAL 2004 nussbraun/NUT BROWN RAL 8011	PBT GF20 PBT GF20	2 1	12 g	1	2	08.05.2001
A7 OBSOLETE	~~2-1393448-4~~	A	V23540-M1050-S538	B - D	Hebel/LEVER Abdeckkappe/COVER	reinorange/PURE ORANGE RAL 2004 rose/ROSE RAL 3017	PBT GF20 PBT GF20	2 1	12 g	1	2	08.05.2001
	2-1393448-3	A	V23540-M1050-S537	A - D	Hebel/LEVER Abdeckkappe/COVER	reinorange/PURE ORANGE RAL 2004 weinrot/WINE RED RAL 3005	PBT GF20 PBT GF20	2 1	12 g	1	2	08.05.2001
	2-1393448-2	A	V23540-M1050-S536	A - C	Hebel/LEVER Abdeckkappe/COVER	reinorange/PURE ORANGE RAL 2004 lichtgrau/LIGHT GREY RAL 7035	PBT GF20 PBT GF20	2 1	12 g	1	2	08.05.2001
	2-1393448-1	A	V23540-M1050-S535	B - E	Hebel/LEVER Abdeckkappe/COVER	reinorange/PURE ORANGE RAL 2004 helltrosa/LIGHT PINK RAL 3015	PBT GF20 PBT GF20	2 1	12 g	1	2	08.05.2001
	2-1393448-0	A	V23540-M1050-S534	A - F	Hebel/LEVER Abdeckkappe/COVER	reinorange/PURE ORANGE RAL 2004 lasilila/BLUE LILAC RAL 4005	PBT GF20 PBT GF20	2 1	12 g	1	2	08.05.2001
	1-1393448-9	A	V23540-M1050-S533	C - E	Hebel/LEVER Abdeckkappe/COVER	reinorange/PURE ORANGE RAL 2004 enzianviolett/HEATHER VIOLET RAL 4003	PBT GF20 PBT GF20	2 1	12 g	1	2	08.05.2001
	1-1393448-8	A	V23540-M1050-S532	A - G	Hebel/LEVER Abdeckkappe/COVER	reinorange/PURE ORANGE RAL 2004 grauweiss/GREY WHITE RAL 9002	PBT GF20 PBT GF20	2 1	12 g	1	2	08.05.2001
	1-1393448-7	A	V23540-M1050-S531	C - F	Hebel/LEVER Abdeckkappe/COVER	reinorange/PURE ORANGE RAL 2004 laubgrün/LEAF GREEN RAL 6002	PBT GF20 PBT GF20	2 1	12 g	1	2	08.05.2001
	1-1393448-6	A	V23540-M1050-S530	B - G	Hebel/LEVER Abdeckkappe/COVER	reinorange/PURE ORANGE RAL 2004 currygelb/CURRY RAL 1027	PBT GF20 PBT GF20	2 1	12 g	1	2	08.05.2001
A7 OBSOLETE	~~1-1393448-5~~	A	V23540-M1050-S529	D - E	Hebel/LEVER Abdeckkappe/COVER	reinorange/PURE ORANGE RAL 2004 türkis blau/TURQUOISE BLUE RAL 5018	PBT GF20 PBT GF20	2 1	12 g	1	2	08.05.2001
	1-1393448-4	A	V23540-M1050-S528	A - H	Hebel/LEVER Abdeckkappe/COVER	reinorange/PURE ORANGE RAL 2004 beige/BEIGE RAL 1001	PBT GF20 PBT GF20	2 1	12 g	1	2	08.05.2001
	1-1393448-4	A	V23540-M1050-S527	D - F	Hebel/LEVER Abdeckkappe/COVER	reinorange/PURE ORANGE RAL 2004 platingrau/PLATINUM GREY RAL 7036	PBT GF20 PBT GF20	2 1	12 g	2	-	08.05.2001
	1-1393448-3	A	V23540-M1050-S526	B - H	Hebel/LEVER Abdeckkappe/COVER	reinorange/PURE ORANGE RAL 2004 lehmbraun/CLAY BROWN RAL 8003	PBT GF20 PBT GF20	2 1	12 g	1	2	08.05.2001
	1-1393448-2	A	V23540-M1050-S525	D - G	Hebel/LEVER Abdeckkappe/COVER	reinorange/PURE ORANGE RAL 2004 signalgrün/SIGNAL GREEN RAL 6032	PBT GF20 PBT GF20	2 1	12 g	1	2	08.05.2001
	1-1393448-1	A	V23540-M1050-S524	C - H	Hebel/LEVER Abdeckkappe/COVER	reinorange/PURE ORANGE RAL 2004 verkehrsgelb/TRAFFIC YELLOW RAL 1023	PBT GF20 PBT GF20	2 1	12 g	1	2	08.05.2001
	1-1393448-0	A	V23540-M1050-S523	A - E	Hebel/LEVER Abdeckkappe/COVER	reinorange/PURE ORANGE RAL 2004 lichtblau/LIGHT BLUE RAL 5012	PBT GF20 PBT GF20	2 1	12 g	1	2	08.05.2001
	1393448-9	A	V23540-M1050-S522	B - F	Hebel/LEVER Abdeckkappe/COVER	reinorange/PURE ORANGE RAL 2004 natur/NATURAL RAL ---	PBT GF20 PBT GF20	2 1	12 g	1	2	08.05.2001
	1393448-8	A	V23540-M1050-S521	C - G	Hebel/LEVER Abdeckkappe/COVER	reinorange/PURE ORANGE RAL 2004 tiefschwarz/JET BLACK RAL 9005	PBT GF20 PBT GF20	2 1	12 g	1	2	08.05.2001
	1393448-7	A	V23540-M1050-S520	D - H	Hebel/LEVER Abdeckkappe/COVER	reinorange/PURE ORANGE RAL 2004 reinorange/PURE ORANGE RAL 2004	PBT GF20 PBT GF20	2 1	12 g	1	2	08.05.2001

TE Assy-PN TE ASSY-PN	TE -Rev. TE -REV	EC Bestell-Nr. EC. CODE-NO.	Kodierung CODING	Beschreibung DESCRIPTION	Farbe COLOR	Werkstoff MATERIAL	Item-Nr. ITEM NO.	Gewicht WEIGHT	Ausführung VERSION	ungeschaltete Ausführung CONVERTED VERSION	Datum der Umstellung DATE OF CONVERSION

THIS DRAWING IS A CONTROLLED DOCUMENT.

DIMENSIONS: mm

TOLERANCES UNLESS OTHERWISE SPECIFIED+
0 PLC ±-
1 PLC ±-
2 PLC ±-
3 PLC ±-
4 PLC ±-
ANGLES ±-

MATERIAL
FINISH

DWN Van Hoecke D. 09JAN2001
CHK Reis B. 09JAN2001
APVD Glaser S. 09JAN2001
PRODUCT SPEC
APPLICATION SPEC
WEIGHT

TE Connectivity

NAME
Maßbild - DIMENS. DRAWING
50P Abdeckkappe-COVER

SIZE A1 | CAGE CODE 00779 | DRAWING NO C-1411133 | RESTRICTED TO

CUSTOMER DRAWING / KUNDENZEICHNUNG | SCALE 1:1, 2:1, 5:1 | SHEET 1 OF 1 | REV A7