THIS DRAWING IS UNPUBLISHED. RELEASED FOR PUBLICATION 2002
© COPYRIGHT 2002 - ALL RIGHTS RESERVED.

LOC	DIST
A1	-

REVISIONS

P	LTR	DESCRIPTION	DATE	DWN	APVD
	L6	ECR-16-014434	12OCT2016	KC	SH
	L7	ECR-17-008199	15JUNE2017	KC	PT
	L8	ECR-20-009664	08JUL2020	VKS	PT
	L9	ECR-23-171716	06APR2023	EM	EM

UP TO 0.75 mm^2 WIRE SIZE

1x	PA66-GF25	96 POS. PCM CON. SLIDE RIGHT -	BLACK -	7
1x	PA66-GF25	96 POS. PCM CON. SLIDE LEFT -	BLACK -	6
1x	PBT-GF20	96 POS. PCM CON. COVER FOR FAMILY SEAL	BLACK -	5
1x	SILICONE	96 POS. PCM CON. FAMILY SEAL -	WHITE -	4
1x	SILICONE	96 POS. PCM CON. PERIPHERAL SEAL -	WHITE -	3
1x	PA66-GF35	96 POS. PCM CON. CONTACT HOUSING -	BLACK -	2
1x	PA66-GF35	96 POS. PCM CON. FEMALE HOUSING -	BLACK -	1
X-1452380-X	ASSY NO / MATERIAL	DESCRIPTION	COLOUR	ITEM NO
70	WEIGHT OF EACH ASSY NO [g]			
QTY REQD PER ASSY	PARTS LIST			

-	-	-
A	15.7	15.7
CODING	X	Y

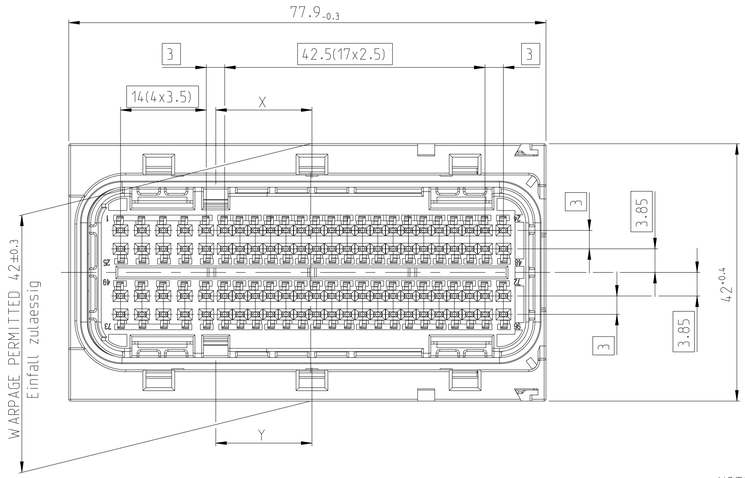

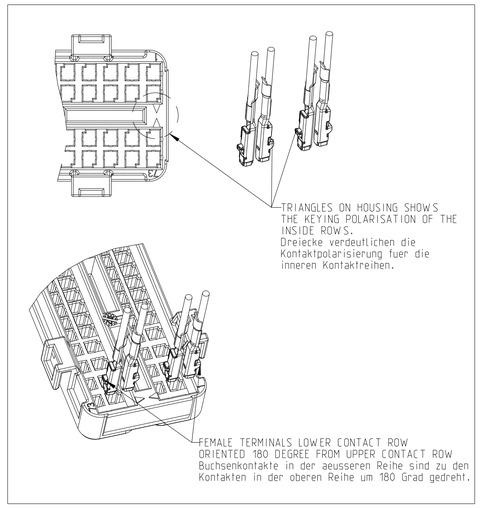

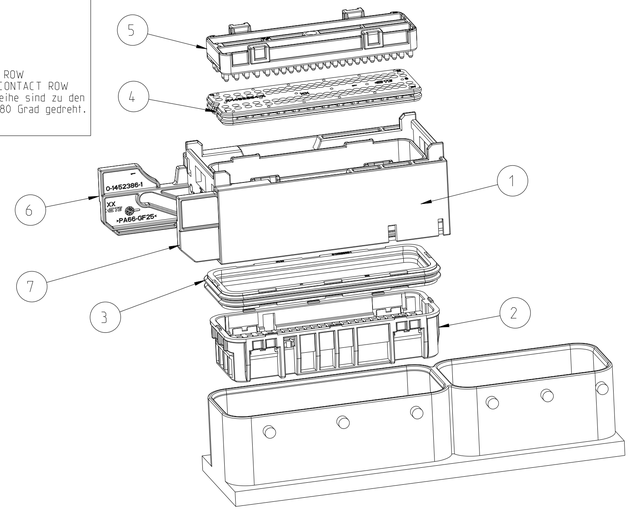

1:1

NOTES:
Bermekungen:

1 ASSY. USED WITH PARTS:
Assy verwendet mit folgenden Teilen:
HEADER BOSCH: PN: 000 20633 614
HEADER TE: PN: 0-1565428-1

THE HEADER IS NOT A PART OF THE DELIVERED ASSY.
Der Header ist kein Bestandteil der gelieferten ASSY.

2 MATED WITH:
Passend zu:
COVER PN: 1452389, 0-1452862-1
2-NDARY LOCK PN: 0-1452388-1
Kappe PN: 1452389, 0-1452862-1
2te Kontaktsicherung PN: 0-1452388-1

3 SEALING FUNCTION REQUIRES ONLY FOLLOWING WIRE SIZE DIAMETERS FOR THE SIGNAL TERMINALS:
Zur Sicherstellung der Dichtigkeit duerfen folgende Drahtquerschnitte bei den Signalkontakten verwendet werden:

a) 0.5mm^2 - 0.75mm^2 = ISO Ø1.4-1.9mm
FOR ALL WITH "X" MARKED CAVITIES, SEE PINOUT CONFIGUARATION TABLE
fuer alle markierten Felder mit "X" in der Pinbelegungstabelle

b) 1.0mm^2 - 1.5mm^2 = ISO Ø1.9-2.4mm
FOR ALL WITH NUMBERED CAVITIES, SEE PINOUT CONFIGUARATION TABLE
fuer alle nummerierten Felder in der Pinbelegungstabelle

4 ASSY DELIVERED WITH SLIDES IN ENDLOCK POSITION
Anlieferungszustand Schieber in Endraststellung

5 TE-PN SHOWN AS "NOT USED" WERE RAISED FOR THE CONNECTOR TE-PN: X-1452419-X
TE-Nr. mit "NOT USED" in der Pinbelegungstabelle werden verwendet im Stecker TE-Nr: X-1452419-X

6 TE-PN SHOWN AS "NOT USED" WERE RAISED FOR THE CONNECTOR TE-PN: X-1452423-X
TE-Nr. mit "NOT USED" in der Pinbelegungstabelle werden verwendet im Stecker TE-Nr: X-1452423-X

INSPECTION DIMENSION
Kontrollmasse

MARKING FOR PINOUTCONFIGURATION
SEE TABLE SHEET 2
Markierung fuer Pinoutkonfigkonfiguration
siehe Tabelle Blatt 2

A-A

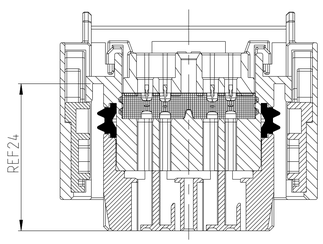

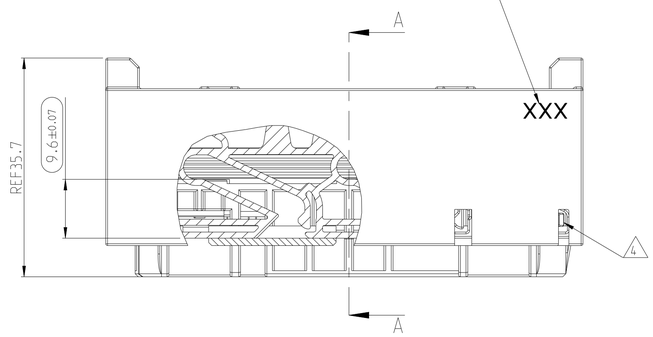

HOUSING IN ENDLOCKPOSITION
WITHOUT COVER ASSY.
Gehaeuse in Endraststellung, ohne Kappenassy

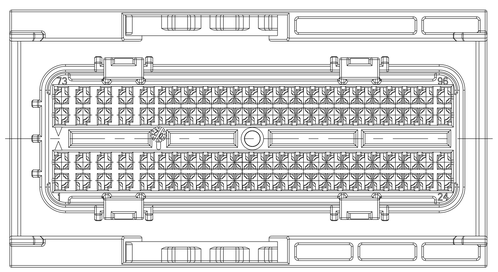

* 1394897 WILL BE REPLACED DURING NEXT YEAR BY 1670144
* 1394897 wird innerhalb eines Jahres ersetzt durch 1670144

TERMINALS TE PN / TE Kontakte PN	FINISH / Oberflaeche	WIRE SIZE (mm^2) / Drahtquerschnitt (mm^2)	NOTES / Bemerkungen
0-1452503-3	SILVER PLATED	1.0 - 1.5	BLINDPLUG Blindstopfen 0.75mm^2 PN 1-1452424-1 BROWN / Braun 1.5mm^2 PN 1-1452424-2 BLUE / Blau
0-1670144-3 *		0.5 - 0.75	
0-1534594-3		0.25 - 0.35	
0-1452503-2	GOLD PLATED	1.0 - 1.5	
0-1670144-2 *		0.5 - 0.75	
0-1534594-2		0.25 - 0.35	
0-1452503-1	PRE-TIN	1.0 - 1.5	
0-1670144-1 *		0.5 - 0.75	
0-1534594-1		0.25 - 0.35	

THIS DRAWING IS A CONTROLLED DOCUMENT.

DIMENSIONS: mm

TOLERANCES UNLESS OTHERWISE SPECIFIED:
0 PLC ±
1 PLC ±
2 PLC ±
3 PLC ±
4 PLC ±
ANGLES ±°

MATERIAL - -
FINISH - -

DWN K.ROTH 12MAR2002
CHK S.DENTER 12MAR2002
APVD G.MUMPER 14MAR2002
PRODUCT SPEC
APPLICATION SPEC 114-18534-1
WEIGHT -

TE Connectivity

NAME 96POS. RECEPTACLE HOUSING ASSEMBLY --

SIZE	CAGE CODE	DRAWING NO	RESTRICTED TO
A1	00779	C-1452380	-

Customer Drawing SCALE 2:1 SHEET 1 OF 3 REV L9

4805 (3/11)

THIS DRAWING IS UNPUBLISHED. © COPYRIGHT 2002 - RELEASED FOR PUBLICATION 2002 ALL RIGHTS RESERVED.

LOC	DIST
A1	-

REVISIONS

P	LTR	DESCRIPTION	DATE	DWN	APVD
	-	SEE SHEET 1	-	-	-

NOTES Bemerkungen	MARKING FOR PINOUT-CONFIGURATION Markierung fuer Pinoutkonfiguration	REV	TE-PN TE-Nr	1	2	3	4	5	6	7	8	9	10	11	12	13	14	15	16	17	18	19	20	21	22	23	24
CD34	128	L	2-2141628-8	X	X	X		X		X			X		X		X	X	X	X	X	X	X				
-	099	L	9-1452380-9	X	X	X	X	X	X	X	X	X	X	X	X	X	X	X	X	X	X	X	X	X	X	X	X
GS41	089	L	8-1452380-9	X		X				X	X	X	X	X	X		X	X	X		X	X		X	X		
I5DEU5 DT 0846	081	L	8-1452380-1	X	X		X	X	X	X	X		X	X		X					X		X	X			X
I5DEU5 ST 0846	080	L	8-1452380-0	X	X		X	X	X	X	X		X	X		X		X	X		X		X	X			X
Mazda 3&6	079	L	7-1452380-9	X		X			X	X	X		X		X	X	X	X	X	X	X	X	X	X			
-	074	L	7-1452380-4	X	X		X	X	X											X			X				X
YUCHAI 4W DIESEL	073	L	7-1452380-3		X	X	X				X	X		X			X										
Y2 SI6T	068	L	6-1452380-8						X	X	X	X	X	X	X	X	X			X	X	X	X	X	X	X	X
I5 TURBO 07/20	067	L	6-1452380-7	X	X	X				X			X		X		X	X	X	X	X	X	X				
I5 NON TURBO 07/20	066	L	6-1452380-6			X	X	X					X	X	X	X	X	X	X	X		X	X	X	X	X	X
X250 V8 SC	062	L	6-1452380-2	X	X				X	X	X		X	X	X			X			X	X	X		X	X	X
X250 V8 NA	061	L	6-1452380-1	X	X				X	X	X		X	X	X			X			X	X	X		X	X	X
X250	060	L	6-1452380-0	X	X				X	X	X		X	X	X			X			X	X	X		X	X	X
I5 NON TURBO ULEV	059	L	5-1452380-9			X	X	X						X	X	X		X	X	X		X	X	X	X	X	X
I5 NON TURBO ULEV OIL LT	058	L	5-1452380-8			X	X	X					X	X	X	X	X	X	X	X		X	X	X	X	X	X
I5 NON TURBO PZEV	057	L	5-1452380-7			X	X	X						X	X	X		X	X	X		X	X	X	X	X	X
I5 TURBO OIL LT	056	L	5-1452380-6	X	X	X				X		X	X		X		X	X	X	X	X	X	X				
CD34X	054	L	5-1452380-4	X	X	X		X		X			X		X		X	X	X	X	X	X	X				
X150	052	L	5-1452380-2	X	X				X	X	X		X	X	X			X	X		X	X	X		X	X	X
C307ST	050	L	5-1452380-0	X	X	X		X		X		X			X		X	X	X	X	X	X					
S16 NON TURBO AUTO	048	L	4-1452380-8						X	X	X	X	X	X	X	X	X			X	X	X	X	X	X	X	X
V8 AUTO	047	L	4-1452380-7						X	X			X	X	X		X	X	X	X	X	X	X		X		X
I5T	046	L	4-1452380-6	X	X	X		X		X			X		X		X	X	X	X	X	X	X				
X206 X356	041	L	4-1452380-1						X	X	X		X	X	X			X	X		X	X	X		X	X	X
X206 X356	040	L	4-1452380-0			X			X	X	X		X	X	X			X	X		X	X	X		X	X	X
X206 X356 X150	039	L	3-1452380-9						X	X	X		X	X	X			X	X		X	X	X		X	X	X
V6 CEP	038	L	3-1452380-8	X	X	X			X	X	X		X	X	X			X	X		X	X	X		X	X	X
V8 N/A	037	L	3-1452380-7	X	X				X	X	X		X	X	X			X	X		X	X	X		X	X	X
V8 SC	036	L	3-1452380-6	X	X				X	X	X		X	X	X			X	X		X	X	X		X	X	X
-	035		NOT USED △5	1	2	3	X	X	X	X	X	X	X	X				X			X	X		X		X	X
V6 CEP X206	034	L	3-1452380-4	X	X	X			X	X	X		X	X	X			X	X		X	X	X		X	X	X
V8 NA X206	033	L	3-1452380-3	X	X				X	X	X		X	X	X			X	X		X	X	X		X	X	X
V8 SC X206	032	L	3-1452380-2	X	X				X	X	X		X	X	X			X	X		X	X	X		X	X	X
-	031		NOT USED △6			3			X	X			X	X	X			X			X	X	X			X	
-	029		NOT USED △6			3			X	X	X		X	X	X			X			X	X	X			X	24
-	028		NOT USED △6	1	2				X	X	X		X	X	X			X	X		X	X	X		X	X	24
-	027		NOT USED △6	1	2				X	X	X		X	X	X			X	X		X	X	X		X	X	24
-	026		NOT USED △6	1	2	3			X	X	X		X	X	X			X	X		X	X	X		X	X	24
-	025		NOT USED △5	1	2	3	X	X	X	X	X	X	X	X				X			X	X		X		X	X
-	024		NOT USED △6			3			X	X	X		X	X	X			X			X	X	X			X	24
-	023		NOT USED △6			3			X	X	X		X	X	X			X			X	X	X			X	
-	022	L	2-1452380-2	X	X	X				X		X			X		X	X	X	X	X	X					
ENGINE V8	021	L	2-1452380-1						X	X			X	X	X		X	X	X	X	X	X	X		X		X
KOELN V6 T5	019		NOT USED △6	1	2	3			X	X			X	X	X			X			X	X	X			X	
AJ43 ENGINES	018		NOT USED △6	1	2	3			X	X	X		X	X	X			X			X	X	X			X	24
TURBO OIL SW 04:18	017	L	1-1452380-7	X	X	X										X		X	X	X	X	X		X			
TURBO OIL QLT 03:38	016	L	1-1452380-6	X	X	X										X		X	X	X	X	X	X				
TURBO OIL QLT 04:18	015	L	1-1452380-5	X	X	X										X		X	X	X	X	X	X	X			
ENGINE ULEV OIL SW 04:18	014	L	1-1452380-4			X	X	X						X	X	X		X	X	X		X	X	X	X	X	X
ENGINE ULEV OIL QLT 03:38	013	L	1-1452380-3			X	X	X					X	X	X	X	X	X	X	X		X	X	X	X	X	X
ENGINE ULEV OIL QLT 04:18	012	L	1-1452380-2			X	X	X					X	X	X	X	X	X	X	X		X	X	X	X	X	X
ENGINE SULEV 04:18	011	L	1-1452380-1			X	X	X						X	X	X		X	X	X		X	X	X	X	X	X
ENGINE V8	009		NOT USED △6						X	X			X	X	X		X	X	X	X	X	X	X		X		24
ENGINE AJ41	008		NOT USED △6	1	2	3			X	X	X		X	X	X			X			X	X	X			X	
TURBO OIL SW 03:38	007	L	0-1452380-7	X	X	X										X		X	X	X	X	X					
ENGINE ULEV OIL SW 03:38	006	L	0-1452380-6			X	X	X						X	X	X		X	X	X		X	X	X	X	X	X
ENGINE SULEV 03:38	005	L	0-1452380-5			X	X	X						X	X	X		X	X	X		X	X	X	X	X	X
TURBO	004	L	0-1452380-4	X	X	X										X		X	X	X	X	X	X	X			
NEDC	003		NOT USED △5	1	2	3			X			X	X	X				X	X	X	X	X	X		X	X	
ENGINE ULEV	002	L	0-1452380-2			X	X	X					X	X	X	X	X	X	X	X		X	X	X	X	X	X
ENGINE SULEV	001	L	0-1452380-1			X	X	X					X	X	X	X	X	X	X	X		X	X	X	X	X	X

MARKING	25	26	27	28	29	30	31	32	33	34	35	36	37	38	39	40	41	42	43	44	45	46	47	48
128	X	X					X			X		X	X	X			X	X	X	X		X		
099	X	X	X	X	X	X	X	X	X	X	X	X	X	X	X	X	X	X	X	X	X	X	X	X
089	X	X					X	X	X	X	X	X		X	X	X		X	X	X	X	X	X	X
081	X	X	X	X	X	X	X	X	X	X	X	X			X			X	X		X	X	X	X
080	X	X	X	X	X	X	X	X	X	X	X	X			X			X	X		X	X		X
079	X	X				X	X	X	X	X	X	X	X	X	X	X		X	X		X	X	X	X
074	X		X	X	X	X											X							
073	X	X					X	X	X		X		X	X				X				X	X	X
068						X			X	X			X			X		X	X		X	X	X	X
067	X	X					X			X		X	X	X			X	X	X	X		X		
066										X	X					X						X	X	X
062	X	X	X	X	X	X			X	X				X	X	X	X	X	X		X	X	X	
061	X	X	X	X	X	X			X	X						X	X	X	X		X	X	X	
060	X	X	X	X	X	X			X	X						X	X	X	X		X	X	X	
059										X	X											X	X	X
058										X	X					X						X	X	X
057										X	X				X				X			X	X	X
056	X	X					X			X		X	X	X			X	X	X	X		X		
054	X	X					X			X		X	X	X			X	X	X	X		X		
052		X	X	X	X	X			X	X				X	X	X	X	X	X		X	X	X	
050	X	X	X				X			X		X	X	X			X	X	X	X		X		
048						X	X	X	X	X				X	X	X	X	X	X		X	X	X	X
047	X	X	X	X	X	X	X	X	X	X						X	X	X	X		X	X	X	X
046	X	X					X			X		X	X	X			X	X	X	X		X		
041		X	X	X	X	X			X	X				X	X	X	X	X	X		X	X	X	
040		X	X	X	X	X			X	X						X	X	X	X		X	X	X	
039		X	X	X	X	X			X	X						X	X	X	X		X	X	X	
038		X	X	X	X	X			X	X						X	X	X	X		X	X	X	
037		X	X	X	X	X			X	X						X	X	X	X		X	X	X	
036		X	X	X	X	X			X	X				X	X	X	X	X	X		X	X	X	
035	25	26		X	X		X	X	X	X		X	X			X	X	X		X			X	X
034		X	X	X	X	X			X	X						X	X	X	X		X	X	X	
033		X	X	X	X	X			X	X						X	X	X	X		X	X	X	
032		X	X	X	X	X			X	X				X	X	X	X	X	X		X	X	X	
031		26	27	28	29	X				X				X				X	X					48
029		26	27	28	29	X			X	X				X	X			X	X			X	X	48
028		26	27	28	29	X			X	X				X	X	X	X	X	X		X	X	X	
027		26	27	28	29	X			X	X						X	X	X	X		X	X	X	
026		26	27	28	29	X			X	X						X	X	X	X		X	X	X	
025	25	26		X	X		X	X	X	X		X	X			X	X	X	X	X		X	X	X
024		26	27	28	29	X			X	X				X	X			X	X			X	X	48
023		26	27	28	29	X			X	X								X	X			X		48
022	X	X					X			X		X	X	X			X	X	X	X		X		
021	X	X	X	X	X	X	X	X	X	X						X	X	X	X		X	X	X	X
019		26	27	28	29	X				X				X				X	X					48
018		26	27	28	29	X			X	X				X	X			X	X			X	X	48
017	X	X							X		X	X	X	X	X	X		X	X	X				
016	X	X									X	X	X	X	X	X		X	X	X				
015	X	X									X	X	X	X	X	X		X	X	X				
014										X	X											X	X	X
013										X	X					X						X	X	X
012										X	X					X						X	X	X
011										X	X				X				X			X	X	X
009	25	26	27	28	29	X	X	X	X	X						X	X	X	X		X	X	X	48
008		26	27	28	29	X			X	X								X	X			X		48
007	X	X							X		X	X	X	X	X	X		X	X	X				
006										X	X											X	X	X
005										X	X				X				X			X	X	X
004	X	X							X		X	X	X	X	X	X		X	X	X				
003	25	26			X		X	X	X	X	X	X	X		X	X		X	X		X		X	X
002										X	X					X					X	X	X	X
001										X	X				X	X			X		X	X	X	X

MARKING	49	50	51	52	53	54	55	56	57	58	59	60	61	62	63	64	65	66	67	68	69	70	71	72
128		X	X		X		X		X	X	X		X		X		X		X	X				X
099	X	X	X	X	X	X	X	X	X	X	X	X	X	X	X	X	X	X	X	X	X	X	X	X
089	X		X				X	X		X			X	X	X	X							X	
081	X	X	X		X			X		X		X	X	X		X	X	X	X	X		X	X	X
080	X	X	X	X	X			X		X		X	X	X		X	X	X	X	X		X	X	X
079	X		X			X	X	X	X	X	X	X	X	X		X		X	X	X				
074		X			X				X		X				X		X	X	X	X	X	X		X
073	X		X					X	X		X	X	X		X	X				X				
068								X	X	X	X	X	X	X	X		X	X	X	X	X	X	X	X
067	X	X	X		X		X		X	X	X		X		X		X		X	X				X
066	X				X					X	X	X		X	X				X	X	X	X	X	X
062		X	X	X	X	X	X	X	X	X	X	X	X	X		X	X	X	X	X	X	X	X	X
061		X	X	X	X	X	X	X	X	X	X	X	X	X		X	X	X	X	X	X	X	X	X
060								X	X	X	X	X	X	X		X	X	X	X	X	X	X	X	X
059	X				X					X	X	X		X	X				X	X	X	X	X	X
058	X				X					X	X	X		X	X				X	X	X	X	X	X
057	X	X			X					X	X	X		X	X	X			X	X	X	X	X	X
056	X	X	X		X		X		X	X	X		X		X		X		X	X				X
054	X	X	X		X		X		X	X	X		X		X		X		X	X				X
052		X	X	X	X	X	X	X	X	X	X	X	X	X		X	X	X	X	X	X	X	X	X
050	X	X	X		X		X		X	X	X		X		X		X		X	X				X
048								X	X	X	X	X	X	X	X		X	X	X	X	X	X	X	
047	X					X	X	X	X	X	X	X	X	X	X	X	X	X	X	X	X	X	X	X
046	X	X	X		X		X		X	X	X		X		X		X		X	X				X
041	X	X	X	X	X	X	X	X	X	X	X	X	X	X		X	X	X	X	X	X	X	X	X
040								X	X	X	X	X	X	X		X	X	X	X	X	X	X	X	X
039		X	X	X	X	X	X	X	X	X	X	X	X	X		X	X	X	X	X	X	X	X	X
038								X	X	X	X	X	X	X		X	X	X	X	X	X	X	X	X
037		X	X	X	X	X	X	X	X	X	X	X	X	X		X	X	X	X	X	X	X	X	X
036	X	X	X	X	X	X	X	X	X	X	X	X	X	X		X	X	X	X	X	X	X	X	X
035	49	50		X	X			X	X	X	X	X	X	X	X	X	X	X	X				X	X
034								X	X	X	X	X	X	X		X	X	X	X	X	X	X	X	X
033		X	X	X	X	X	X	X	X	X	X	X	X	X		X	X	X	X	X	X	X	X	X
032	X	X	X	X	X	X	X	X	X	X	X	X	X	X		X	X	X	X	X	X	X	X	X
031								X	X	X	X	X	X	X	X	X	X	X	X	X	X	X		72
029						X	X	X	X	X	X	X	X	X	X	X	X	X	X	X	X	X	X	72
028	49	50	51	52	53	X	X	X	X	X	X	X	X	X		X	X	X	X	X	X	X	X	72
027		50	51	52	53	X	X	X	X	X	X	X	X	X		X	X	X	X	X	X	X	X	72
026								X	X	X	X	X	X	X		X	X	X	X	X	X	X	X	72
025	49	50		X	X			X	X	X	X	X	X	X	X	X	X	X	X				X	X
024		50	51	52	53	X	X	X	X	X	X	X	X	X	X	X	X	X	X	X	X	X	X	72
023		50	51	52	53	X	X	X	X	X	X	X	X	X	X	X	X	X	X	X	X	X		72
022	X	X	X		X		X		X	X	X		X		X		X		X	X				X
021	X					X	X	X	X	X	X	X	X	X	X	X	X	X	X	X	X	X	X	X
019								X	X	X	X	X	X	X	X	X	X	X	X	X	X	X		72
018		50	51	52	53	X	X	X	X	X	X	X	X	X	X	X	X	X	X	X	X	X	X	72
017	X	X	X		X		X	X		X	X	X	X	X	X		X	X	X		X	X		X
016	X	X	X		X		X	X		X	X	X	X	X	X		X	X	X		X	X		X
015	X	X	X		X		X	X		X	X	X	X	X	X		X	X	X		X	X		X
014	X				X					X	X	X		X	X				X	X	X	X	X	X
013	X				X					X	X	X		X	X				X	X	X	X	X	X
012	X				X					X	X	X		X	X				X	X	X	X	X	X
011	X	X			X					X	X	X		X	X	X			X	X	X	X	X	X
009	49					X	X	X	X	X	X	X	X	X	X	X	X	X	X	X	X	X	X	72
008		50	51	52	53	X	X	X	X	X	X	X	X	X	X	X	X	X	X	X	X	X		72
007	X	X	X		X		X	X		X	X	X	X	X	X		X	X	X		X	X		X
006	X				X					X	X	X		X	X				X	X	X	X	X	X
005	X	X			X					X	X	X		X	X	X			X	X	X	X	X	X
004	X	X	X		X		X	X		X	X	X	X	X	X		X	X	X		X	X		X
003	49	50			X			X	X		X	X	X			X	X	X						
002	X				X					X	X	X		X	X				X	X	X	X	X	X
001	X	X			X					X	X	X		X	X	X			X	X	X	X	X	X

MARKING	73	74	75	76	77	78	79	80	81	82	83	84	85	86	87	88	89	90	91	92	93	94	95	96
128	X	X	X		X		X		X	X	X		X	X	X	X	X	X	X	X			X	X
099	X	X	X	X	X	X	X	X	X	X	X	X	X	X	X	X	X	X	X	X	X	X	X	X
089	X	X					X	X		X			X		X	X	X	X	X				X	
081	X	X		X	X	X	X	X	X	X	X		X		X		X	X	X				X	X
080	X	X		X	X	X	X	X	X	X	X		X		X		X	X	X				X	X
079	X	X				X		X					X	X			X	X	X	X	X	X		
074			X		X	X		X	X		X	X		X		X				X	X	X		X
073		X		X						X	X	X	X	X	X	X								
068	X	X	X	X		X	X	X	X	X	X	X	X	X		X		X		X			X	
067	X	X	X		X		X		X	X	X		X	X	X	X	X	X	X	X			X	X
066		X	X	X		X	X	X	X	X	X	X				X					X	X		X
062		X	X	X	X	X	X	X	X	X	X	X	X	X	X	X	X			X		X		
061		X	X	X	X	X	X	X	X	X	X	X	X	X	X	X	X			X				
060		X	X	X	X	X	X	X	X	X	X	X		X	X	X	X	X		X				
059		X	X	X		X	X	X	X	X	X	X				X			X		X	X		X
058		X	X	X		X	X	X	X	X	X	X				X			X		X	X		X
057		X	X	X		X	X	X	X	X	X	X				X			X		X	X	X	X
056	X	X	X		X		X		X	X	X		X	X	X	X	X	X	X	X			X	X
054	X	X	X		X		X		X	X	X		X	X	X	X	X	X	X	X			X	X
052		X	X	X	X	X	X	X	X	X	X	X	X	X	X	X	X	X		X		X		
050	X	X	X		X		X		X	X	X			X	X	X	X	X	X	X			X	X
048	X	X	X	X	X	X	X	X	X	X	X	X	X	X		X	X	X	X	X				
047		X	X	X	X	X	X	X	X	X	X	X	X	X	X	X	X	X	X	X			X	
046	X	X	X		X		X		X	X	X		X	X	X	X	X	X	X	X			X	X
041		X	X	X	X	X	X	X	X	X	X	X	X	X	X	X				X		X		
040		X	X	X	X	X	X	X	X	X	X	X		X	X	X	X	X		X				X
039		X	X	X	X	X	X	X	X	X	X	X	X	X	X	X				X				
038		X	X	X	X	X	X	X	X	X	X	X		X	X	X	X	X		X				X
037		X	X	X	X	X	X	X	X	X	X	X	X	X	X	X				X				
036		X	X	X	X	X	X	X	X	X	X	X	X	X	X	X				X		X		
035	73	74	75		X	X		X	X	X		X	X	X	X	X		X		X	X	X		
034		X	X	X	X	X	X	X	X	X	X	X		X	X	X	X	X		X				X
033		X	X	X	X	X	X	X	X	X	X	X	X	X	X	X				X				
032		X	X	X	X	X	X	X	X	X	X	X	X	X	X	X				X		X		
031		74	75	76	77	X	X	X	X	X	X	X						X		X	X	X	X	96
029		74	75	76	77	X	X	X	X	X	X	X	X							X	X	X	X	96
028		74	75	76	77	X	X	X	X	X	X	X	X	X	X	X	X	X		X		X		
027		74	75	76	77	X	X	X	X	X	X	X	X	X	X	X	X	X		X				
026		74	75	76	77	X	X	X	X	X	X	X		X	X	X	X	X		X				96
025	73	74	75	X	X	X	X	X	X	X		X	X	X	X	X		X		X	X	X		
024		74	75	76	77	X	X	X	X	X	X	X	X							X	X	X	X	96
023		74	75	76	77	X	X	X	X	X	X	X	X	X	X					X	X	X	X	96
022	X	X	X		X		X		X	X	X			X	X	X	X	X	X	X			X	X
021		X	X	X	X	X	X	X	X	X	X	X	X	X	X	X	X	X	X	X			X	
019		74	75	76	77	X	X	X	X	X	X	X						X		X	X	X	X	96
018		74	75	76	77	X	X	X	X	X	X	X	X							X	X	X	X	96
017	X	X	X		X		X	X		X	X				X	X			X	X	X	X		X
016	X	X	X		X		X	X		X	X		X	X	X	X			X	X	X	X		X
015	X	X	X		X		X	X		X	X		X	X	X	X			X	X	X	X		X
014		X	X	X		X		X	X	X	X	X				X			X		X	X		X
013		X	X	X		X		X	X	X	X	X									X	X		X
012		X	X	X		X		X	X	X	X	X				X					X	X		X
011		X	X	X		X		X	X	X	X	X				X			X		X	X	X	X
009		74	75	76	77	X	X	X	X	X	X	X	X	X	X	X	X	X	X	X			X	
008		74	75	76	77	X	X	X	X	X	X	X	X	X	X					X	X	X	X	96
007	X	X	X		X		X	X		X	X				X	X			X	X	X	X		X
006		X	X	X		X		X	X	X	X	X							X		X	X		X
005		X	X	X		X		X	X	X	X	X							X		X	X	X	X
004	X	X	X		X		X	X		X	X		X	X	X	X			X	X	X	X		X
003	73	74	75		X			X	X	X		X		X	X	X	X	X			X	X	X	
002		X	X	X		X		X	X	X	X	X				X			X		X	X		X
001		X	X	X		X	X	X	X	X	X	X				X			X		X	X	X	X

BLANKED CAVITIES INDICATE CLOSED LOCATIONS
Leere Felder kennzeichnen geschlossene Kammern

NUMBERED CAVITIES INDICATE OPEN LOCATIONS FOR TERMINALS WITH WIRE SIZE > 0.75mm2 △3
Nummerierte Felder kennzeichnen offene Kammern fuer Kontakte mit Drahtquerschnitt >0.75mm2

WITH "X" MARKED CAVITIES INDICATE OPEN LOCATIONS FOR TERMINALS WITH WIRE SIZE 0.5 - 0.75mm2 △3
Markierte Felder mit "X" kennzeichnen offene Kammern fuer Kontakte mit Drahtquerschnitt 0.5 - 0.75mm2

THIS DRAWING IS A CONTROLLED DOCUMENT.

DIMENSIONS: mm	TOLERANCES UNLESS OTHERWISE SPECIFIED: 0 PLC ± 1 PLC ± 2 PLC ± 3 PLC ± 4 PLC ± ANGLES ±1°
MATERIAL - -	FINISH - -

DWN K.ROTH	12MAR2002	
CHK S.DENTER	12MAR2002	
APVD G.MUMPER	14MAR2002	
PRODUCT SPEC -		
APPLICATION SPEC 114-18534-1		
WEIGHT -		

TE Connectivity

NAME: 96POS. RECEPTACLE HOUSING ASSEMBLY --

SIZE	CAGE CODE	DRAWING NO	RESTRICTED TO
A1	00779	C-1452380	-

Customer Drawing | SCALE 2:1 | SHEET 2 OF 3 | REV L9

4805 (3/11)

THIS DRAWING IS UNPUBLISHED. | RELEASED FOR PUBLICATION 2002
© COPYRIGHT 2002 - | ALL RIGHTS RESERVED.

LOC	DIST
AI	-

REVISIONS					
P	LTR	DESCRIPTION	DATE	DWN	APVD
	-	SEE SHEET 1	-	-	-

NOTES Bemerkungen	MARKING FOR PINOUT-CONFIG-URATION Markierung fuer Pinout-konfig-uration	REV	TE-PN TE-Nr	1	2	3	4	5	6	7	8	9	10	11	12	13	14	15	16	17	18	19	20	21	22	23	24	25	26	27	28	29	30	31	32
(L9) Sumitomo	105	L	0-2141628-5			X		X	X	X		X	X			X	X	X	X	X	X	X	X	X	X	X			X			X		X	
Nissan-1	104	L	0-2141628-4	X		X				X	X	X		X	X	X	X	X	X	X	X	X	X	X	X	X		X	X					X	X
-	103	L	0-2141628-3			X		X	X	X		X	X			X	X	X	X	X	X	X	X	X	X	X			X			X		X	
-	102	L	0-2141628-2	X		X		X	X	X	X	X	X		X	X	X	X	X	X	X	X	X	X	X	X		X	X					X	X
-	101	L	0-2141628-1		X	X	X				X			X			X											X	X					X	X

MARKING	33	34	35	36	37	38	39	40	41	42	43	44	45	46	47	48	49	50	51	52	53	54	55	56	57	58	59	60	61	62	63	64
105	X	X			X	X	X	X		X	X		X	X		X	X		X			X	X			X		X	X			
104	X		X	X	X	X	X	X		X	X	X	X	X	X	X	X		X			X	X			X	X	X	X			
103	X	X			X	X	X	X		X	X		X	X		X	X		X			X	X			X		X	X			
102	X	X		X	X	X	X	X		X	X	X	X	X	X	X	X		X			X	X			X	X	X	X			
101					X	X				X	X			X	X	X	X		X					X	X		X		X			X

MARKING	65	66	67	68	69	70	71	72	73	74	75	76	77	78	79	80	81	82	83	84	85	86	87	88	89	90	91	92	93	94	95	96
105							X		X	X						X	X	X											X			
104							X		X	X				X					X	X	X											
103							X		X	X						X													X			
102							X		X	X						X																
101				X						X		X			X					X	X	X	X	X								

BLANKED CAVITIES INDICATE CLOSED LOCATIONS
Leere Felder kennzeichnen geschlossene Kammern

NUMBERED CAVITIES INDICATE OPEN LOCATIONS FOR TERMINALS WITH WIRE SIZE > 0.75mm2 (3)
Nummerierte Felder kennzeichnen offene Kammern fuer Kontakte mit Drahtquerschnitt >0.75mm2

WITH "X" MARKED CAVITIES INDICATE OPEN LOCATIONS FOR TERMINALS WITH WIRE SIZE 0.5 - 0.75mm2 (3)
Markierte Felder mit "X" kennzeichnen offene Kammern fuer Kontakte mit Drahtquerschnitt 0.5 - 0.75mm2

THIS DRAWING IS A CONTROLLED DOCUMENT.

DIMENSIONS: mm

TOLERANCES UNLESS OTHERWISE SPECIFIED:
0 PLC ±
1 PLC ±
2 PLC ±
3 PLC ±
4 PLC ±
ANGLES ±1°

MATERIAL - -
FINISH - -

DWN K.ROTH 12MAR2002
CHK S.DENTER 12MAR2002
APVD G.MUMPER 14MAR2002
PRODUCT SPEC -
APPLICATION SPEC 114-18534-1
WEIGHT -

TE Connectivity

NAME 96POS. RECEPTACLE HOUSING ASSEMBLY
--

SIZE A1 | CAGE CODE 00779 | DRAWING NO C-1452380 | RESTRICTED TO -

Customer Drawing | SCALE 2:1 | SHEET 3 OF 3 | REV L9

4805 (3/11)