THIS DRAWING IS UNPUBLISHED. RELEASED FOR PUBLICATION 2002
© COPYRIGHT 2002 - ALL RIGHTS RESERVED.

UP TO 1,5mm² WIRE SIZE

-	-	-
A	15.7	15.7
CODING	X	Y

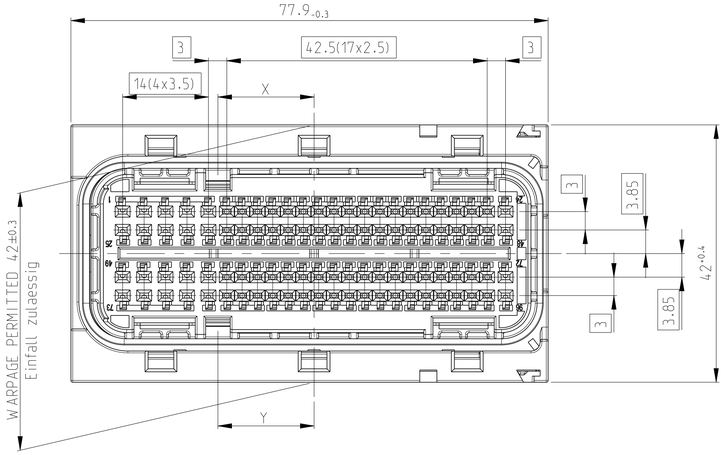

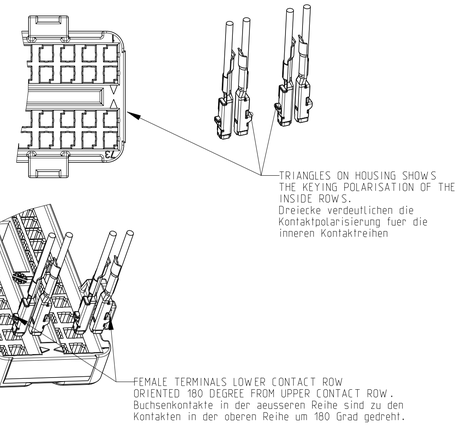

LOC	DIST
A1	-

REVISIONS

P	LTR	DESCRIPTION	DATE	DWN	APVD
	L	ECR-11-005928	17JAN2012	PT	GM
	L1	ECR-12-005745	28MAR2012	SH	GM
	L2	ECR-13-008465	24MAY2013	SH	GM
	L3	ECR-20-009464	09JULY2020	KC	SH

1x	PA66-GF25	96 POS. PCM CON. SLIDE RIGHT	BLACK	7
1x	PA66-GF25	96 POS. PCM CON. SLIDE LEFT	BLACK	6
1x	PBT-GF20	96 POS. PCM CON. COVER FOR FAMILY SEAL	BLACK	5
1x	SILICONE	96 POS. PCM CON. FAMILY SEAL	GREY	4
1x	SILICONE	96 POS. PCM CON. PERIPHERAL SEAL	WHITE	3
1x	PA66-GF35	96 POS. PCM CON. CONTACT HOUSING	BLACK	2
1x	PA66-GF35	96 POS. PCM CON. FEMALE HOUSING	BLACK	1
X-1452423-X	ASSY NO / MATERIAL	DESCRIPTION	COLOUR	ITEM NO
70.00	WEIGHT OF EACH ASSY NO (g)			
QTY REQD PER ASSY	PARTS LIST			

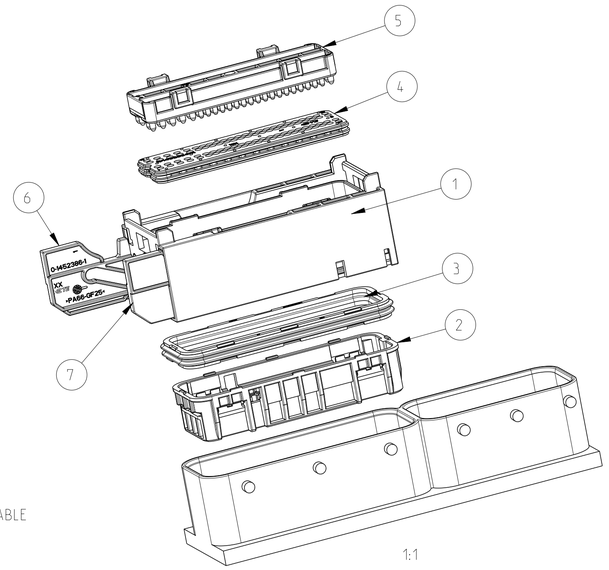

A-A

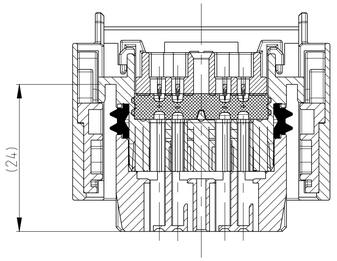

MARKING FOR PINOUTCONFIGURATION
SEE TAB SHEET 2
Markierung fuer Pinoutkonfiguration
siehe Tabelle Blatt 2

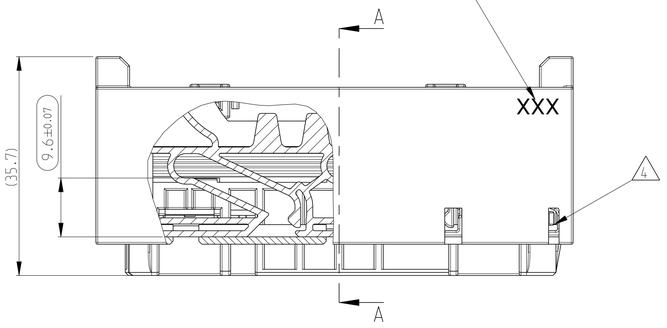

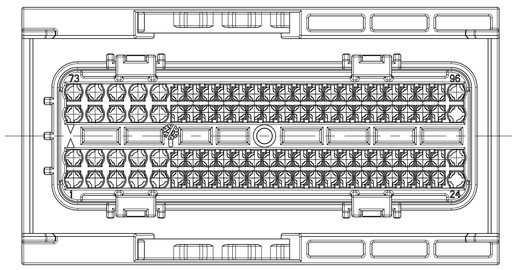

NOTES:
Bermekungen:

1 ASSY. USED WITH PARTS:
Assy verwendet mit folgenden Teilen:
HEADER BOSCH: PN: 000 20633 614
HEADER TE: PN 0-1565428-1

THE HEADER IS NOT A PART OF THE DELIVERED ASSY.
Der Header ist kein Bestandteil der gelieferten ASSY.

2 MATED WITH:
Passend zu:
COVER PN: 1452389, 0-1452862-1
2-NDARY LOCK PN: 0-1452388-1
Kappe PN: 1452389, 0-1452862-1
2te Kontaktsicherung PN: 0-1452388-1

△3 SEALING FUNCTION REQUIRES ONLY FOLLOWING WIRE SIZE DIAMETERS FOR THE SIGNAL TERMINALS:
Zur Sicherstellung der Dichtigkeit duerfen folgende Drahtquerschnitte bei den Signalkontakten verwendet werden:

a) 0.5mm² - 0.75mm² = ISO Ø 1.4-1.9 mm
FOR ALL WITH "X" MARKED CAVITIES, SEE PINOUT CONFIGUARATION TABLE
fuer alle markierten Felder mit "X" in der Pinbelegungstabelle

b) 1.0mm² - 1.5mm² = ISO Ø 1.9-2.4mm
FOR ALL WITH NUMBERED CAVITIES, SEE PINOUT CONFIGUARATION TABLE
fuer alle nummerierten Felder in der Pinbelegungstabelle

△4 ASSY DELIVERED WITH SLIDES IN ENDLOCK POSITION
Anlieferungszustand Schieber in Endraststellung

△5 TE-PN SHOWN AS "NOT USED" WERE RAISED FOR THE CONNECTOR TE-PN: X-1452380-X
TE-Nr. mit "NOT USED" in der Pinbelegungstabelle werden verwendet im Stecker TE-Nr: X-1452380-X

△6 TE-PN SHOWN AS "NOT USED" WERE RAISED FOR THE CONNECTOR TE-PN: X-1452419-X
TE-Nr. mit "NOT USED" in der Pinbelegungstabelle werden verwendet im Stecker TE-Nr: X-1452419-X

INSPECTION DIMENSION
Kontrollmasse

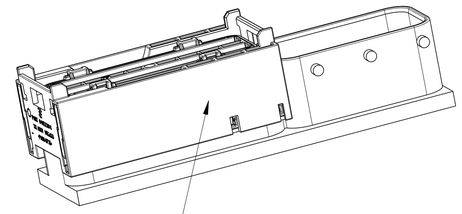

* 1394897 WILL BE REPLACED DURING NEXT YEAR BY 1670144
* 1394897 wird innerhalb eines Jahres ersetzt durch 1670144

TERMINALS TE PN TE Kontakte PN	FINISH Oberflaeche	WIRE SIZE (mm²) Drahtquerschnitt (mm²)	NOTES Bemerkungen
0-1452503-3	SILVER PLATED	1.0 - 1.5	BLINDPLUG Blindstopfen 0.75mm² PN 1-1452424-1 BROWN / Braun 1.5mm² PN 1-1452424-2 BLUE / Blau
0-1670144-3 *		0.5 - 0.75	
~~0-1534594-3~~		~~0.25 - 0.35~~	
0-1452503-2	GOLD PLATED	1.0 - 1.5	
0-1670144-2 *		0.5 - 0.75	
~~0-1534594-2~~		~~0.25 - 0.35~~	
0-1452503-1	PRE-TIN	1.0 - 1.5	
0-1670144-1 *		0.5 - 0.75	
~~0-1534594-1~~		~~0.25 - 0.35~~	

4805 (3/11)

THIS DRAWING IS A CONTROLLED DOCUMENT.

DIMENSIONS: mm
TOLERANCES UNLESS OTHERWISE SPECIFIED:
0 PLC ±
1 PLC ±
2 PLC ±
3 PLC ±
4 PLC ±
ANGLES ±1°
MATERIAL - -
FINISH - -

DWN S.DENTER 20SEP2002
CHK S.DENTER 20SEP2002
APVD G.MUMPER 20SEP2002
PRODUCT SPEC -
APPLICATION SPEC 114-18534-1
WEIGHT -

TE Connectivity

NAME 96POS. RECEPTACLE HOUSING ASSEMBLY
--

SIZE	CAGE CODE	DRAWING NO	RESTRICTED TO
A1	00779	C-1452423	

CUSTOMER DRAWING | SCALE 2:1 | SHEET 1 OF 2 | REV L3

THIS DRAWING IS UNPUBLISHED. | RELEASED FOR PUBLICATION 2002
© COPYRIGHT 2002 - | ALL RIGHTS RESERVED.

LOC	DIST
A1	-

REVISIONS

P	LTR	DESCRIPTION	DATE	DWN	APVD
	-	SEE SHEET 1	-	-	-

					1	2	3	4	5	6	7	8	9	10	11	12	13	14	15	16	17	18	19	20	21	22	23	24	25	26	27	28	29	30	31	32
	-	099	9-1452423-9	L	1	2	3	4	5	X	X	X	X	X	X	X	X	X	X	X	X	X	X	X	X	X	X	24	25	26	27	28	29	X	X	X
	Volvo Eicher	088	8-1452423-8	L	1	2						X	X																25	26					X	X
	P326X MDE for EME	087	8-1452423-7	L	1	2	3		5			X	X				X	X						X	X				25	26	27		29		X	X
	RT/RM	086	8-1452423-6	L	1		3	4	5	X	X	X	X									X	X	X	X	X				26	27	28		X	X	
	SUBARU EZ5-D	085	8-1452423-5	L	1		3			X	X	X	X	X	X	X	X	X	X	X	X	X	X	X	X	X			25	26				X	X	X
	SUBARU EZ5-D	084	8-1452423-4	L	1		3			X	X	X	X	X	X	X	X	X	X	X	X	X	X	X	X	X			25	26				X	X	X
	D3 MARINE EVC EC	082	8-1452423-2	L	1	2		4	5		X					X	X					X			X				25	26	27	28				
L3	~~AJ133~~	~~072~~	~~7-1452423-2~~	L	1	2	3	4	5	X	X	X	X	X	X	X	X	X	X	X	X	X	X	X	X	X	X	24	25	26	27	28	29	X	X	X
L3	~~AJ133~~	~~071~~	~~7-1452423-1~~	L	1	2	3	4	5	X	X	X	X	X	X	X	X	X	X	X	X	X	X	X	X	X	X	24	25	26	27	28	29	X	X	X
L3	~~AJ133~~	~~070~~	~~7-1452423-0~~	L	1	2	3	4	5	X	X	X	X	X	X	X	X	X	X	X	X	X	X	X	X	X	X	24	25	26	27	28	29	X	X	X
L3	~~AJ133~~	~~069~~	~~6-1452423-9~~	L	1	2	3	4	5	X	X	X	X	X	X	X	X	X	X	X	X	X	X	X	X	X	X	24	25	26	27	28	29	X	X	X
L3	~~AJ133~~	~~065~~	~~6-1452423-5~~	L	1	2	3	4	5	X	X	X	X	X	X	X	X	X	X	X	X	X	X	X	X	X	X	24	25	26	27	28	29	X	X	X
	CD345	064	6-1452423-4	L						X	X	X	X	X	X	X	X	X			X	X	X	X	X	X	X	24						X	X	X
L3	~~AJ133~~	~~063~~	~~6-1452423-3~~	L	1	2	3	4	5	X	X	X	X	X	X	X	X	X	X	X	X	X	X	X	X	X	X	24	25	26	27	28	29	X	X	X
	D385	055	5-1452423-5	L											X											X	X		25	26	27					
L3	~~V114~~	~~053~~	~~5-1452423-3~~	L	1	2	3	4	5		X	X	X							X			X	X	X	X		24	25	26	27	28				
	AJ43/44	051	5-1452423-1	L			3			X	X	X		X	X	X			X			X	X	X			X	24		26	27	28	29	X		
	-	043	4-1452423-3	L	1	2	3			X	X	X		X		X			X					X		X	X		25	26	27				X	
	-	042	4-1452423-2	L	1	2	3			X	X	X	X	X	X	X			X			X	X	X		X	X	24	25	26	27	28			X	
	-	035	NOT USED △6		1	2	3	X	X	X	X	X	X	X	X				X			X	X		X		X	X	25	26		X	X		X	X
	V6 CEP X206	034	NOT USED △5		X	X	X			X	X	X		X	X	X			X	X		X	X	X		X	X	X		X	X	X	X	X		
	V8 NA X206	033	NOT USED △5		X	X				X	X	X		X	X	X			X	X		X	X	X		X	X	X		X	X	X	X	X		
	V8 SC X206	032	NOT USED △5		X	X				X	X	X		X	X	X			X	X		X	X	X		X	X	X		X	X	X	X	X		
	-	031	3-1452423-1	L			3			X	X			X	X	X			X			X	X	X			X			26	27	28	29	X		
	-	029	2-1452423-9	L			3			X	X	X		X	X	X			X			X	X	X			X	24		26	27	28	29	X		
	-	028	2-1452423-8	L	1	2				X	X	X		X	X	X			X	X		X	X	X		X	X	24		26	27	28	29	X		
L3	-	~~027~~	~~2-1452423-7~~	L	1	2				X	X	X		X	X	X			X	X		X	X	X		X	X	24		26	27	28	29	X		
L3	-	~~026~~	~~2-1452423-6~~	L	1	2	3			X	X	X		X	X	X			X	X		X	X	X		X	X	24		26	27	28	29	X		
	-	025	NOT USED △6		1	2	3	X	X	X	X	X	X	X	X				X			X	X		X		X	X	25	26		X	X		X	X
L3	-	~~024~~	~~2-1452423-4~~	L			3			X	X	X		X	X	X			X			X	X	X			X	24		26	27	28	29	X		
	-	023	2-1452423-3	L			3			X	X	X		X	X	X			X			X	X	X			X			26	27	28	29	X		
	-	022	NOT USED △5		X	X	X				X		X			X		X	X	X	X	X	X						X	X					X	
	ENGINE V8	021	NOT USED △5							X	X			X	X	X		X	X	X	X	X	X	X		X		X	X	X	X	X	X	X	X	X
L3	~~KOELN V6 T5~~	~~019~~	~~1-1452423-9~~	L	1	2	3			X	X			X	X	X			X			X	X	X			X			26	27	28	29	X		
L3	~~AJ43 ENGINES~~	~~018~~	~~1-1452423-8~~	L	1	2	3			X	X	X		X	X	X			X			X	X	X			X	24		26	27	28	29	X		
	TURBO OIL SW 04:18	017	NOT USED △5		X	X	X										X		X	X	X	X	X		X				X	X						
	TURBO OIL QLT 03:38	016	NOT USED △5		X	X	X										X		X	X	X	X	X	X					X	X						
	TURBO OIL QLT 04:18	015	NOT USED △5		X	X	X										X		X	X	X	X	X	X	X				X	X						
	ENGINE ULEV OIL SW 04:18	014	NOT USED △5				X	X	X						X	X	X		X	X	X		X	X	X	X	X	X								
	ENGINE ULEV OIL QLT 03:38	013	NOT USED △5				X	X	X					X	X	X	X	X	X	X	X		X	X	X	X	X	X								
	ENGINE ULEV OIL QLT 04:18	012	NOT USED △5				X	X	X					X	X	X	X	X	X	X	X		X	X	X	X	X	X								
	ENGINE SULEV 04:18	011	NOT USED △5				X	X	X						X	X	X		X	X	X		X	X	X	X	X	X								
L3	~~ENGINE V8~~	~~009~~	~~0-1452423-9~~	L						X	X			X	X	X		X	X	X	X	X	X	X		X		24	25	26	27	28	29	X	X	X
L3	~~ENGINE AJ41~~	~~008~~	~~0-1452423-8~~	L	1	2	3			X	X	X		X	X	X			X			X	X	X			X			26	27	28	29	X		
	TURBO OIL SWITCH 03:38	007	NOT USED △5		X	X	X										X		X	X	X	X	X						X	X						
	ENGINE ULEV OIL SWITCH 03:38	006	NOT USED △5				X	X	X						X	X	X		X	X	X		X	X	X	X	X	X								
	ENGINE SULEV 03:38	005	NOT USED △5				X	X	X						X	X	X		X	X	X		X	X	X	X	X	X								
	TURBO	004	NOT USED △5		X	X	X										X		X	X	X	X	X	X	X				X	X						
	NEDC	003	NOT USED △6		1	2	3			X			X	X	X				X	X	X	X	X	X		X	X		25	26			X		X	X
	ENGINE ULEV	002	NOT USED △5				X	X	X					X	X	X	X	X	X	X	X		X	X	X	X	X	X								
	ENGINE SULEV	001	NOT USED △5				X	X	X					X	X	X	X	X	X	X	X		X	X	X	X	X	X								
	NOTES Bemerkungen	MARKING FOR PINOUT-CONFIGURATION Markierung fuer Pinout-konfiguration	TE-PN TE-Nr	REV	1	2	3	4	5	6	7	8	9	10	11	12	13	14	15	16	17	18	19	20	21	22	23	24	25	26	27	28	29	30	31	32

MARKING	33	34	35	36	37	38	39	40	41	42	43	44	45	46	47	48	49	50	51	52	53	54	55	56	57	58	59	60	61	62	63	64
099	X	X	X	X	X	X	X	X	X	X	X	X	X	X	X	48	49	50	51	52	53	X	X	X	X	X	X	X	X	X	X	X
088	X						X										49	50								X	X				X	X
087	X				X		X	X									49	50	51		53		X	X		X	X				X	X
086			X	X			X	X		X		X		X	X		49	50	51	52	53			X				X	X	X	X	X
085	X	X	X	X	X	X	X	X		X	X	X	X	X	X	48	49		51			X	X	X			X	X	X	X		
084	X	X	X	X	X	X	X	X		X	X	X		X	X	48	49		51			X	X	X			X	X	X	X		
082			X				X	X		X	X			X			49	50	51		53		X	X					X	X		X
~~072~~	X	X	X	X		X	X			X	X	X	X	X	X	48	49	50	51	52	53	X	X	X	X	X	X	X	X		X	
~~071~~	X	X	X	X	X	X	X			X	X	X	X	X	X	48	49	50	51	52	53	X	X	X	X	X	X	X	X		X	
~~070~~	X	X	X	X		X	X			X	X	X	X	X	X	48	49	50	51	52	53	X	X	X	X	X	X	X	X		X	
~~069~~	X	X	X	X	X	X	X			X	X	X	X	X	X	48	49	50	51	52	53	X	X	X	X	X	X	X	X		X	
~~065~~	X	X	X	X	X	X	X	X		X	X	X	X	X	X	48	49	50	51	52	53	X	X	X	X	X	X	X	X		X	
064	X	X				X	X	X	X	X	X		X	X	X	48								X	X	X	X	X	X	X	X	
~~063~~	X	X	X	X	X	X	X			X	X	X	X	X	X	48	49	50	51	52	53	X	X	X	X	X	X	X	X		X	
055	X	X					X				X	X		X	X					52			X	X	X							
~~053~~				X			X	X			X	X	X			48	49	50	51	52		X	X	X	X	X	X	X			X	X
051	X	X				X	X			X	X			X	X	48						X	X	X	X	X	X	X	X	X	X	X
043	X	X	X							X					X	48	49	50	51		53							X	X	X		X
042	X	X	X	X	X		X	X	X	X	X				X	48	49	50	51	52	53			X	X			X	X	X	X	X
035	X	X		X	X			X	X	X		X			X	X	49	50		X	X			X	X	X	X	X	X	X	X	X
034	X	X						X	X	X	X		X	X	X									X	X	X	X	X	X	X		X
033	X	X						X	X	X	X		X	X	X			X	X	X	X	X	X	X	X	X	X	X	X	X		X
032	X	X				X	X	X	X	X	X		X	X	X		X	X	X	X	X	X	X	X	X	X	X	X	X	X		X
031		X				X				X	X					48								X	X	X	X	X	X	X	X	X
029	X	X				X	X			X	X			X	X	48						X	X	X	X	X	X	X	X	X	X	X
028	X	X				X	X	X	X	X	X		X	X	X		49	50	51	52	53	X	X	X	X	X	X	X	X	X		X
~~027~~	X	X						X	X	X	X		X	X	X			50	51	52	53	X	X	X	X	X	X	X	X	X		X
~~026~~	X	X						X	X	X	X		X	X	X									X	X	X	X	X	X	X		X
025	X	X		X	X			X	X	X	X	X		X	X	X	49	50		X	X			X	X	X	X	X	X	X	X	X
~~024~~	X	X				X	X			X	X			X	X	48		50	51	52	53	X	X	X	X	X	X	X	X	X	X	X
023	X	X								X	X			X		48		50	51	52	53	X	X	X	X	X	X	X	X	X	X	X
022		X		X	X	X			X	X	X	X		X			X	X	X		X		X		X	X	X		X		X	
021	X	X						X	X	X	X		X	X	X	X	X					X	X	X	X	X	X	X	X	X	X	X
~~019~~		X				X				X	X					48								X	X	X	X	X	X	X	X	X
~~018~~	X	X				X	X			X	X			X	X	48		50	51	52	53	X	X	X	X	X	X	X	X	X	X	X
017	X		X	X	X	X	X	X		X	X	X					X	X	X		X		X	X		X	X	X	X	X	X	
016			X	X	X	X	X	X		X	X	X					X	X	X		X		X	X		X	X	X	X	X	X	
015			X	X	X	X	X	X		X	X	X					X	X	X		X		X	X		X	X	X	X	X	X	
014		X	X											X	X	X	X				X					X	X	X		X	X	
013		X	X					X						X	X	X	X				X					X	X	X		X	X	
012		X	X					X						X	X	X	X				X					X	X	X		X	X	
011		X	X				X				X			X	X	X	X	X			X					X	X	X		X	X	X
~~009~~	X	X						X	X	X	X		X	X	X	48	49					X	X	X	X	X	X	X	X	X	X	X
~~008~~	X	X								X	X			X		48		50	51	52	53	X	X	X	X	X	X	X	X	X	X	X
007	X		X	X	X	X	X	X		X	X	X					X	X	X		X		X	X		X	X	X	X	X	X	
006		X	X											X	X	X	X				X					X	X	X		X	X	
005		X	X				X				X			X	X	X	X	X			X					X	X	X		X	X	X
004	X		X	X	X	X	X	X		X	X	X					X	X	X		X		X	X		X	X	X	X	X	X	
003	X	X	X	X	X		X	X		X	X		X		X	X	49	50			X			X	X		X	X	X			X
002		X	X					X					X	X	X	X	X				X					X	X	X		X	X	
001		X	X				X	X			X		X	X	X	X	X	X			X					X	X	X		X	X	X
MARKING	33	34	35	36	37	38	39	40	41	42	43	44	45	46	47	48	49	50	51	52	53	54	55	56	57	58	59	60	61	62	63	64

MARKING	65	66	67	68	69	70	71	72	73	74	75	76	77	78	79	80	81	82	83	84	85	86	87	88	89	90	91	92	93	94	95	96
099	X	X	X	X	X	X	X	72	73	74	75	76	77	X	X	X	X	X	X	X	X	X	X	X	X	X	X	X	X	X	X	96
088			X						73	74							X	X	X				X	X			X		X		X	96
087	X		X	X		X	X	72	73	74	75		77				X	X	X				X	X	X		X	X	X		X	96
086	X	X	X			X		72		74		76	77			X				X	X	X	X		X	X	X	X	X	X	X	96
085		X	X	X	X	X			73	74				X		X	X		X		X	X			X	X	X	X	X		X	
084		X	X	X	X	X			73	74				X		X	X		X		X	X			X	X	X	X	X		X	
082							X		73	74		76		X				X	X				X		X				X		X	
~~072~~	X	X	X	X	X	X	X	72	73	74	75	76	77			X	X	X		X	X	X	X	X	X	X		X		X	X	96
~~071~~	X	X	X	X	X	X	X	72	73	74	75	76	77			X	X	X	X	X	X	X	X	X	X					X	X	96
~~070~~	X	X	X	X	X	X	X	72	73	74	75	76	77				X	X		X	X	X	X	X	X	X		X		X	X	96
~~069~~	X	X	X	X	X	X	X	72	73	74	75	76	77				X	X	X	X	X	X	X	X	X					X	X	96
~~065~~	X	X	X	X	X	X	X	72	73	74	75	76	77			X	X	X	X	X	X	X	X	X	X	X		X		X	X	96
064	X	X	X	X	X	X	X		73	74	75	76	77	X	X	X	X	X	X	X	X	X		X	X	X	X	X				
~~063~~	X	X	X	X	X	X	X	72	73	74	75	76	77					X	X		X	X	X	X	X	X		X		X	X	96
055																																
~~053~~	X		X		X		X	72	73	74	75	76		X	X	X	X		X				X		X	X	X				X	96
051	X	X	X	X	X	X	X	72		74	75	76	77	X	X	X	X	X	X	X	X	X	X					X	X	X	X	96
043	X		X				X		73	74	75		77			X	X	X	X	X	X			X	X				X	X		
042	X	X	X				X	72	73	74	75	76	77			X	X	X	X	X	X		X	X	X	X			X	X		
035	X	X	X				X	X	73	74	75		X	X		X	X	X		X	X	X	X	X		X		X	X	X		
034	X	X	X	X	X	X	X	X		X	X	X	X	X	X	X	X	X	X	X		X	X	X	X	X		X				X
033	X	X	X	X	X	X	X	X		X	X	X	X	X	X	X	X	X	X	X	X	X	X	X	X			X				
032	X	X	X	X	X	X	X	X		X	X	X	X	X	X	X	X	X	X	X	X	X	X	X	X			X		X		
031	X	X	X	X	X	X		72		74	75	76	77	X	X	X	X	X	X	X						X		X	X	X	X	96
029	X	X	X	X	X	X	X	72		74	75	76	77	X	X	X	X	X	X	X	X							X	X	X	X	96
028	X	X	X	X	X	X	X	72		74	75	76	77	X	X	X	X	X	X	X	X	X	X	X	X			X		X		
~~027~~	X	X	X	X	X	X	X	72		74	75	76	77	X	X	X	X	X	X	X	X	X	X	X	X			X				
~~026~~	X	X	X	X	X	X	X	72		74	75	76	77	X	X	X	X	X	X	X		X	X	X	X	X		X				96
025	X	X	X				X	X	73	74	75	X	X	X	X	X	X	X		X	X	X	X	X		X		X	X	X		
~~024~~	X	X	X	X	X	X	X	72		74	75	76	77	X	X	X	X	X	X	X	X							X	X	X	X	96
023	X	X	X	X	X	X		72		74	75	76	77	X	X	X	X	X	X	X	X	X	X					X	X	X	X	96
022	X		X	X				X	X	X	X		X		X		X	X	X			X	X	X	X	X	X	X			X	X
021	X	X	X	X	X	X	X	X		X	X	X	X	X	X	X	X	X	X	X	X	X	X	X	X	X	X	X			X	
~~019~~	X	X	X	X	X	X		72		74	75	76	77	X	X	X	X	X	X	X						X		X	X	X	X	96
~~018~~	X	X	X	X	X	X	X	72		74	75	76	77	X	X	X	X	X	X	X	X							X	X	X	X	96
017	X	X	X		X	X		X	X	X	X		X		X	X		X	X				X	X			X	X	X	X		X
016	X	X	X		X	X		X	X	X	X		X		X	X		X	X		X	X	X	X			X	X	X	X		X
015	X	X	X		X	X		X	X	X	X		X		X	X		X	X		X	X	X	X			X	X	X	X		X
014			X	X	X	X	X	X		X	X	X		X		X	X	X	X	X				X			X		X	X		X
013			X	X	X	X	X	X		X	X	X		X		X	X	X	X	X									X	X		X
012			X	X	X	X	X	X		X	X	X		X		X	X	X	X	X				X					X	X		X
011			X	X	X	X	X	X		X	X	X		X		X	X	X	X	X				X			X		X	X	X	X
~~009~~	X	X	X	X	X	X	X	72		74	75	76	77	X	X	X	X	X	X	X	X	X	X	X	X	X	X	X			X	
~~008~~	X	X	X	X	X	X		72		74	75	76	77	X	X	X	X	X	X	X	X	X	X					X	X	X	X	96
007	X	X	X		X	X		X	X	X	X		X		X	X		X	X				X	X			X	X	X	X		X
006			X	X	X	X	X	X		X	X	X		X		X	X	X	X	X							X		X	X		X
005			X	X	X	X	X	X		X	X	X		X		X	X	X	X	X							X		X	X	X	X
004	X	X	X		X	X		X	X	X	X		X		X	X		X	X		X	X	X	X			X	X	X	X		X
003	X	X							73	74	75		X			X	X	X		X		X	X	X	X	X			X	X	X	
002			X	X	X	X	X	X		X	X	X		X		X	X	X	X	X				X			X		X	X		X
001			X	X	X	X	X	X		X	X	X		X	X	X	X	X	X	X				X			X		X	X	X	X
MARKING	65	66	67	68	69	70	71	72	73	74	75	76	77	78	79	80	81	82	83	84	85	86	87	88	89	90	91	92	93	94	95	96

BLANKED CAVITIES INDICATE CLOSED LOCATIONS
Leere Felder kennzeichnen geschlossene Kammern

NUMBERED CAVITIES INDICATE OPEN LOCATIONS FOR TERMINALS WITH WIRE SIZE > $0.75mm^2$ △3
Nummerierte Felder kennzeichnen offene Kammern fuer Kontakte mit Drahtquerschnitt >$0.75mm^2$

WITH "X" MARKED CAVITIES INDICATE OPEN LOCATIONS FOR TERMINALS WITH WIRE SIZE 0.5 - $0.75mm^2$ △3
Markierte Felder mit "X" kennzeichnen offene Kammern fuer Kontakte mit Drahtquerschnitt 0.5 - $0.75mm^2$

THIS DRAWING IS A CONTROLLED DOCUMENT.

DIMENSIONS: mm	TOLERANCES UNLESS OTHERWISE SPECIFIED: 0 PLC ± 1 PLC ± 2 PLC ± 3 PLC ± 4 PLC ± ANGLES ±1°
MATERIAL - -	FINISH - -

DWN S.DENTER	20SEP2002
CHK S.DENTER	20SEP2002
APVD G.MUMPER	20SEP2002
PRODUCT SPEC -	
APPLICATION SPEC 114-18534-1	
WEIGHT -	

TE Connectivity

NAME: 96POS. RECEPTACLE HOUSING ASSEMBLY
--

SIZE	CAGE CODE	DRAWING NO	RESTRICTED TO
A1	00779	C-1452423	

CUSTOMER DRAWING | SCALE 2:1 | SHEET 2 OF 2 | REV L3