A-772XTB REV. A

REVISIONS			RELEASED	
SYM	DESCRIPTION		DATE	APPROVED
A	08-013978	REDRAWN; UPDATED PRINT FOR RELEASE TO PRODUCTION	08/05/21	CS

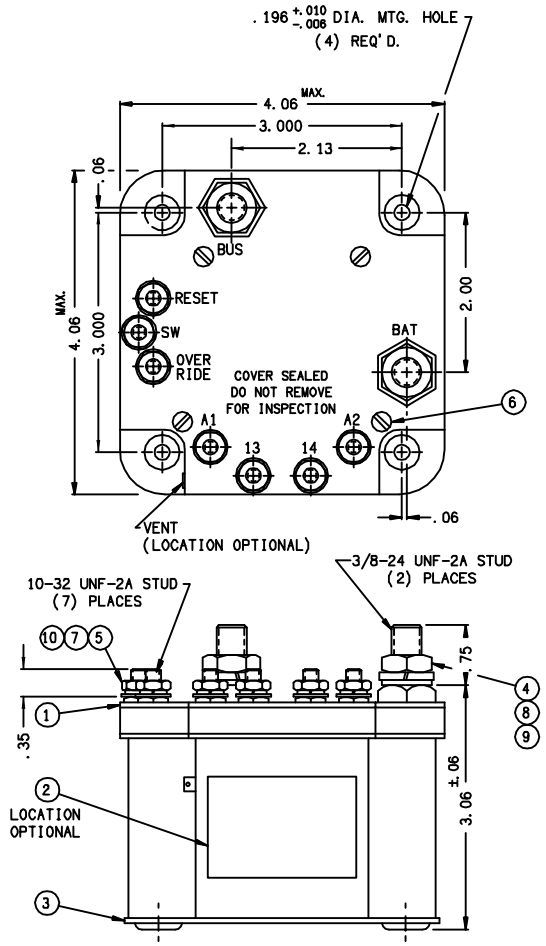

CONSTRUCTION	GASKET SEALED VENTED
CONTACTS	
CONFIGURATION	SPST N. O.
VOLTAGE	28 VDC
CURRENT	200 AMP
AUX. CONTACTS	
CONFIGURATION	SPST N. C.
VOLTAGE	28 VDC
CURRENT, RES.	5 A
COIL DATA	
DUTY	CONTINUOUS
MAX. OPERATE	30 V
MIN. OPERATE	24 V
PICKUP AT 25 ⌴	16 V MAX
DROPOUT	1 - 7 V
OVERLOAD SENSOR	
TYPE	LATCHING
POLARIZED	DISCHARGE
TRIP	300 AMP # 10%
SENSOR CONTACTS AUX.	
CONFIGURATION	SPST N. O.
VOLTAGE	28 VDC
CURRENT, RES.	3 A
RESET	18 V. MAX.
TRIP	1.5 V. MAX.
TIME DELAY	
NOMINAL	900 MS TO 1100 MS
TEMPERATURE	-55 TO +71°C
LIFE ELECTRICAL	50,000 OPERATIONS
LIFE MECHANICAL	100,000 OPERATIONS
WEIGHT MAX.	2 LBS. 13 OZ.

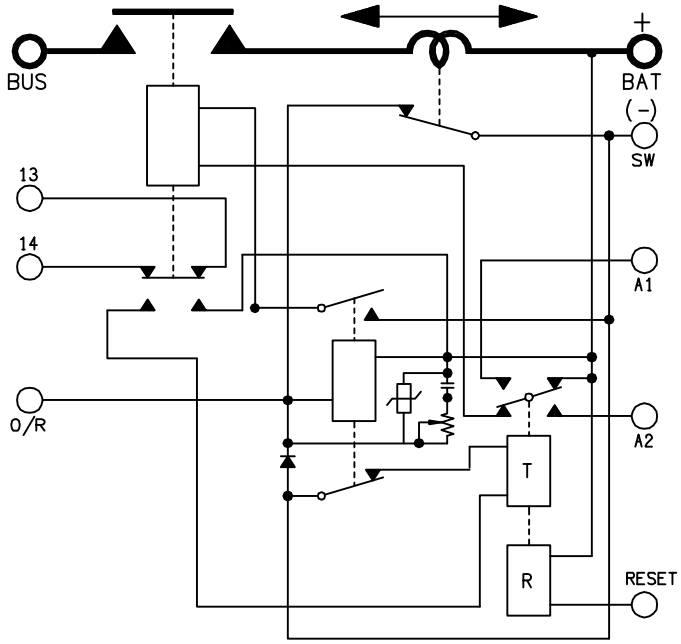

FIND NO	QTY REQD	PART OR IDENTIFYING NO	NOMENCLATURE OR DESCRIPTION	FSCM NO	DRAWING OR SPECIFICATION	MATERIAL OR NOTE
10	7	51810-031	WASHER - LOCK No. 10 SPLIT			STEEL
9	2	51807-071	WASHER - LOCK 3/8 SPLIT			STEEL
8	2	51704-161	WASHER - FLAT 5/8 X .390 X .064			STEEL
7	7	51702-851	WASHER - FLAT 7/16 X 13/64 X.032			STEEL
6	4	51200-020	SCREW No. 4 X 1/4 BD. HD.			ST. STEEL
5	7	50410-086	NUT - HEX 10-32 X 3/8 X 1/8			BRASS
4	2	50407-166	NUT - HEX 3/8-24 X 5/8 X 7/32			BRASS
3	1	44117-010	CONTACTOR ASSEMBLY - PRIMARY			
2	1	16043-001	PLATE - NAME			
1	1	13470-007	PLATE - BASE COVER			

NOTE:
MAIN CONTACTOR COIL RESISTANCE AT 25°C
90 OHS ±20%

UNLESS OTHERWISE SPECIFIED DIMENSIONS ARE IN INCHES TOLERANCES ON

2 PL DEC.	3 PL DEC.	ANGLES
±.06	±.010	±1°

DR BY	DLM	94/12/30
CHK BY	RS	94/01/03
ENGR	DM	95/01/03
MFG	DA	08/05/21

SIZE C | CODE IDENT 74063 | SCALE 1/1 | SHEET

Tyco Electronics
Hartman™ Division • 175 N. DIAMOND STREET MANSFIELD, OHIO 44902

BATTERY CONTACTOR
DISCHARGE OVERLOAD
200 AMP 24 VDC 093

DWG NO. A-772XTB

REF TE P/N 1616545-1