THIS DRAWING IS UNPUBLISHED. RELEASED FOR PUBLICATION -,- .
© COPYRIGHT - BY TYCO ELECTRONICS CORPORATION. ALL RIGHTS RESERVED.

LOC	DIST
J	—

REVISIONS 変更

P	LTR	DESCRIPTION	DATE	DWN	APVD
	A	ECR-12-007088	17APR12	SY	AC
	B	ECR-12-009867	6NOV12	SY	AC

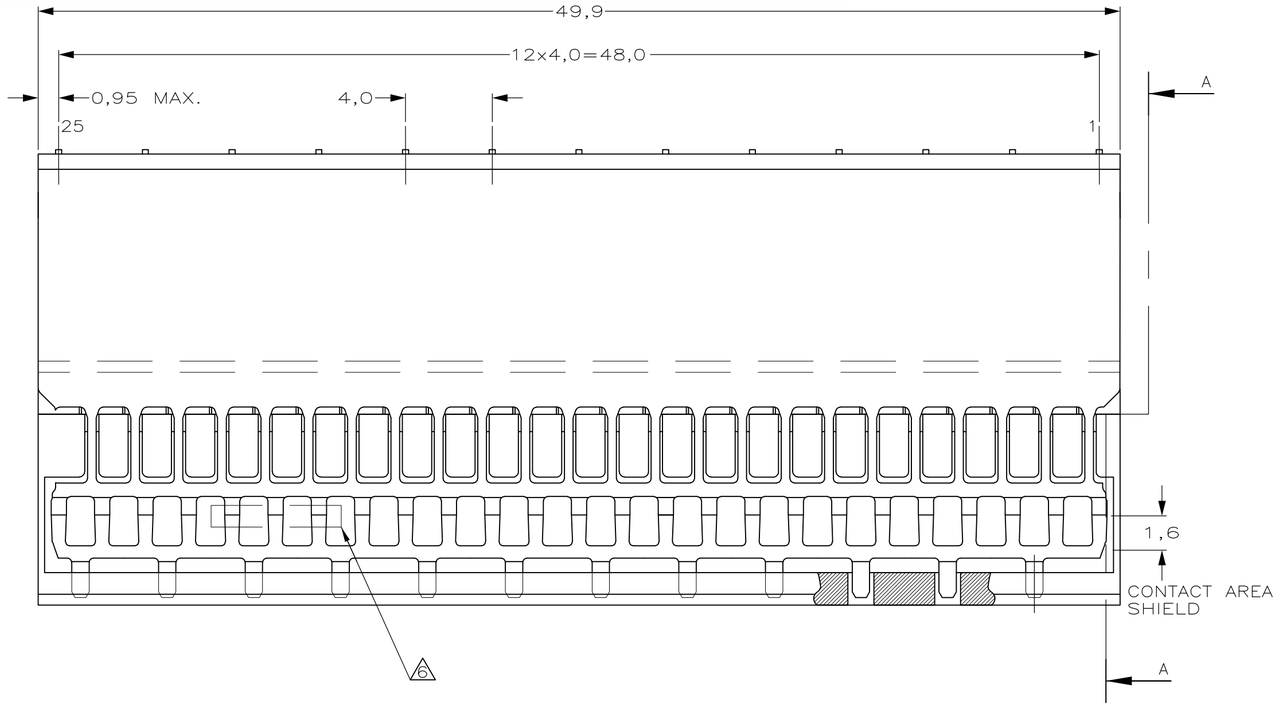

SECTION A–A

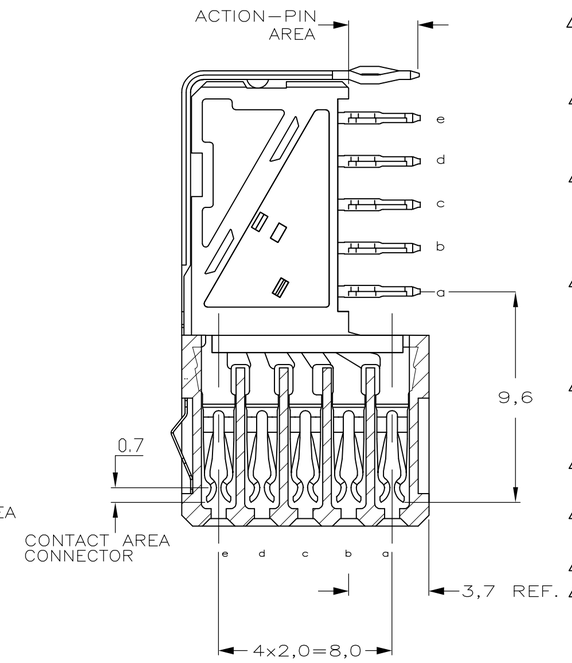

1 PLATING CONNECTOR:
CONTACT AREA: 0,76µm Au MIN. OVER 1,27µm Ni MIN.
ACTION PIN : 0,5µm SnPb MIN. OVER 1,27µm Ni MIN.

2 PLATING CONNECTOR:
CONTACT AREA: 0,76µm Au MIN. OVER 1,27µm Ni MIN.
ACTION PIN : 0,5µm Sn MIN. OVER 1,27µm Ni MIN.

3 PLATING SHIELD:
CONTACT AREA: 0,76µm Au MIN.
ACTION PIN : 0,5µm SnPb MIN.
REMAINDER : Ni

4 PLATING SHIELD:
CONTACT AREA: 0,76µm Au MIN.
ACTION PIN : 0,5µm Sn MIN.
REMAINDER : Ni

5 MATERIAL CONTACTS; PHOSPHORBRONZE
MATERIAL SHIELD; PHOSPHORBRONZE
MATERIAL HOUSING; GLASSFILLED POLYESTER (GRAY)

6 ASSEMBLY PRINTED WITH P/N AND DATECODE
THE MARKING CAN APPEAR ON THE FRONT SIDE OR BACK SIDE.

7 HOLE PATTERN FOR FEMALE CONNECTOR TYPE B
125 PLATED–THROUGH HOLES AT 2x2mm SQUARE GRID

8 ROW "f" 13 PLATED THROUGH HOLES FOR UPPERSHIELD

9 CONNECTOR LUBRICATED WITH BELLCORE
APPROVED LUBRICANT, TECHNICAL REFERENCE
TR–NWT–001217 ISSUE 1, SEPT. 1992.
CONNECTOR TESTED AND QUALIFIED AGAINST BELLCORE
QUALITY LEVEL III, CENTRAL OFFICE APPLICATIONS.

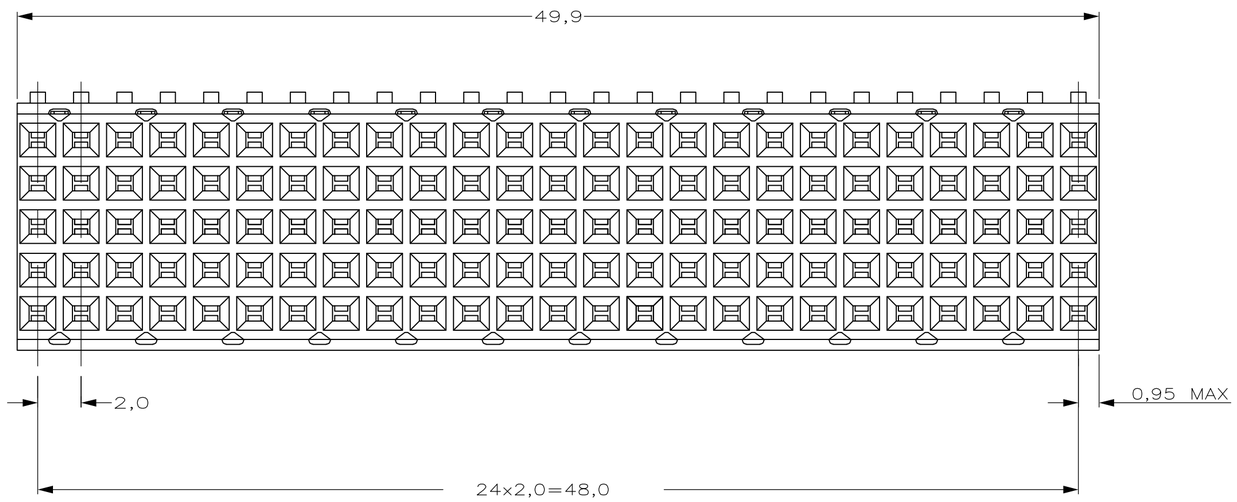

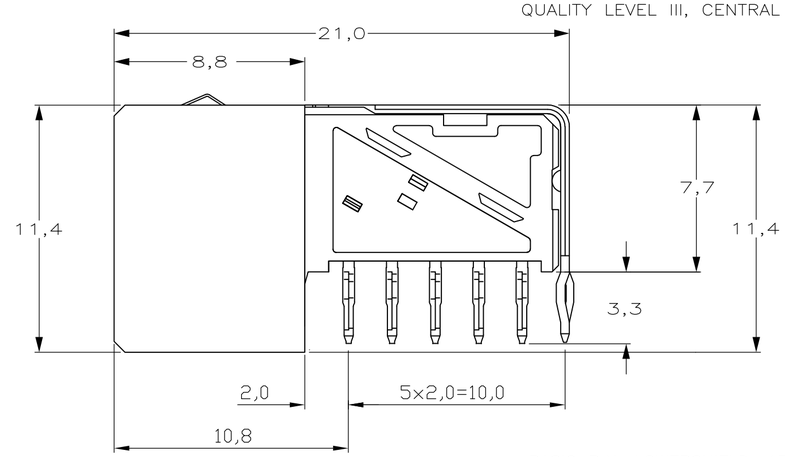

10 BASIC P.N. LOWERSHIELD: 1746986.

11 OBSOLETE PARTS: OBSOLETE CIS STREAMLINING
PER D.RENAUD/D.SINISI

		FINISH	MATERIAL	PART NUMBER
11	OBSOLETE	2 4 9	5	~~1-1746993-9~~
		2 4	5	1-1746993-1
11	OBSOLETE	1 3 9	5	~~1746993-9~~
11	OBSOLETE	1 3	5	~~1746993-1~~

COMPONENT SIDE AS SHOWN
RECOMMENDED PCB–HOLE LAY–OUT
SCALE 2,5:1

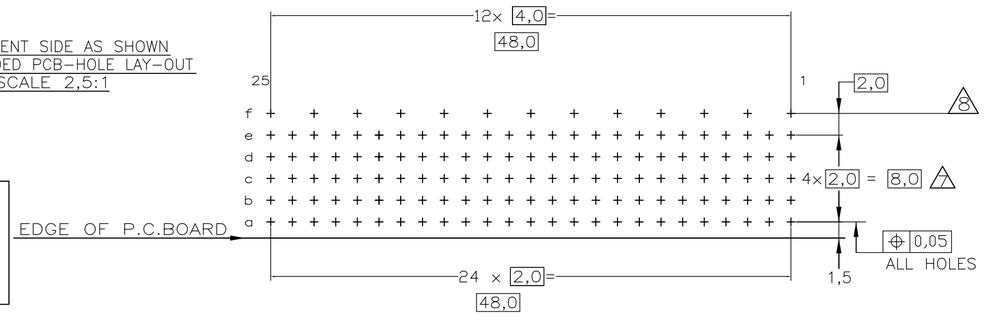

P.C.B. HOLE DIM. ACTION PIN
FIN. HOLE : 0,55 TO 0,65mm
OTHER REQUIREMENTS SEE
APPLICATION SPECIFICATION
114–19029

THIS DRAWING IS A CONTROLLED DOCUMENT.

DIMENSIONS: 単位: 粍 mm

TOLERANCES UNLESS OTHERWISE SPECIFIED: 一般公差
0 PLC ± 0.3
1 PLC ± 0.3
2 PLC ± 0.3
3 PLC ± 0.3
4 PLC ± –
ANGLES ± 3°

MATERIAL 材料: SEE TABLE
FINISH 仕上: SEE TABLE

DWN T.KATANO 10MAY04
CHK T.KIMURA 14MAY04
APVD K.IKEGAMI 14MAY04
PRODUCT SPEC 製品規格 108–19082
APPLICATION SPEC 取付適用規格 114–19029
WEIGHT –

Tyco Electronics — Tyco Electronics AMP K.K. Kawasaki, Japan

NAME 名称: Z–PACK 2mm HM
125 POS. FEMALE CONNECTOR TYPE B
WITH GROUND RETURN UPPER SHIELD

SIZE A2 | CAGE CODE 00779 | DRAWING NO 番号 C–1746993 | RESTRICTED TO –

CUSTOMER DRAWING | SCALE 尺度 5:1 | SHEET 1 OF 1 | REV B

1746993