© – TE Connectivity. All Rights Reserved.

REVISIONS					
P	LTR	DESCRIPTION	DATE	DWN	APVD
	C	REVISED PER ECR-25-241820	18APR2025	GC	JM

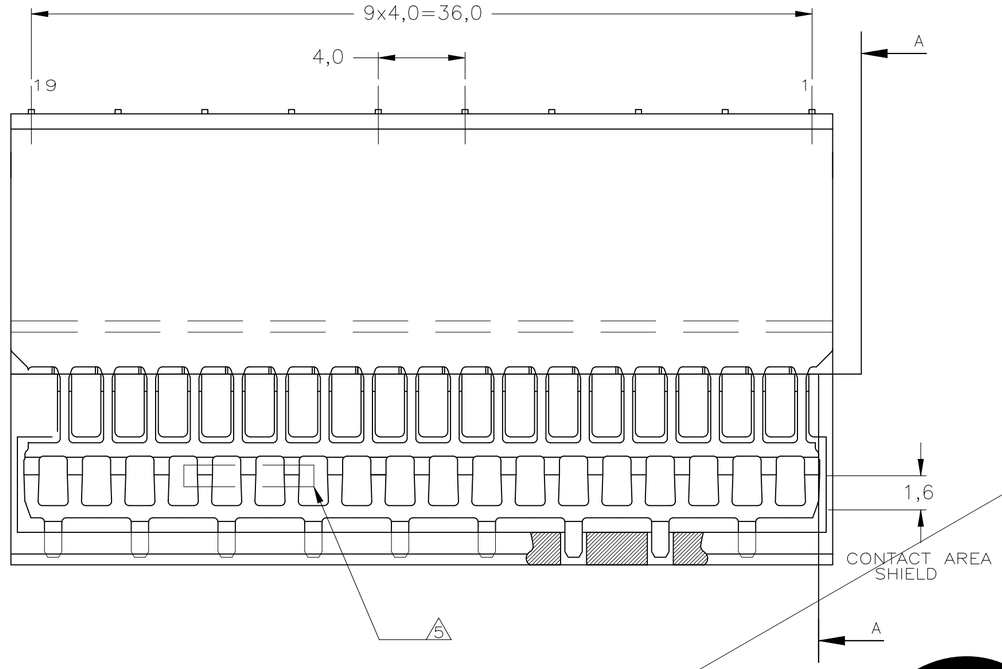

SECTION A–A

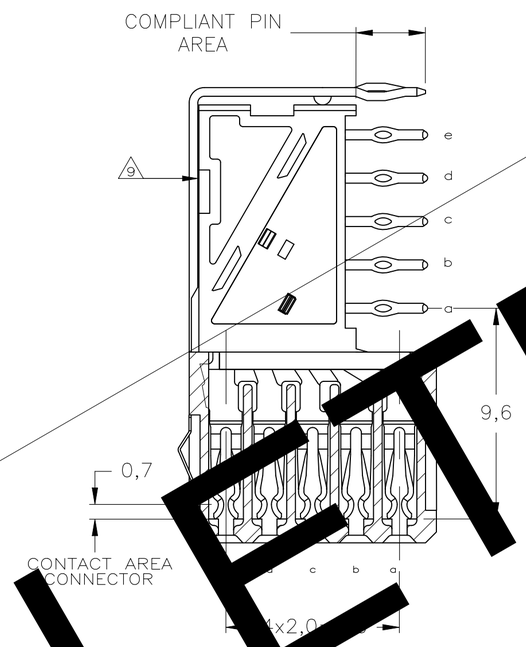

NOTES:

1. MATERIAL CONTACTS; PHOSPHORBRONZE
   MATERIAL HOUSING; GLASSFILLED POLYESTER (GRAY)
2. GENERAL PLATING SPECIFICATION: UNDERPLATING (ENTIRE CONTACT): 1,27µm NICKEL MIN. AND COMPLIANT PIN SECTION: 0,5µm TIN–LEAD MIN. FOR PLATING OF MATING SURFACES SEE APPLICABLE SPECIFICATION REFERENCE FOR EACH DASH NUMBER.
3. CONFORMS TO ALL TESTING ACCORDING IEC 61076–4–101 PERFORMANCE LEVEL 2.
4. CONFORMS TO ALL TESTING ACCORDING IEC 61076–4–101 PERFORMANCE LEVEL 1.
5. ASSEMBLY PRINTED WITH P/N AND DATECODE THE MARKING CAN APPEAR ON THE FRONT SIDE OR BACK SIDE.
6. HOLE PATTERN FOR FEMALE CONNECTOR TYPE B–19 COLUMNS 95 PLATED–THROUGH HOLES AT 2x2mm SQUARE GRID ROW "f" PLATED THROUGH HOLES FOR UPPERSHIELD
7. CONNECTOR & SHIELD LUBRICATED WITH BELLCORE APPROVED LUBRICANT, TECHNICAL REFERENCE TR–NWT–001217 ISSUE 1, SEPT. 1992. CONNECTOR TESTED AND QUALIFIED AGAINST BELLCORE QUALITY LEVEL III, CENTRAL OFFICE APPLICATIONS
9. SHIELD MOUNTED ON CONNECTOR WITH DOUBLE SIDED ADHESIVE TAPE OR ADHESIVE.
10. BASIC P.N. LOWERSHIELD: 352029 OR 5352029

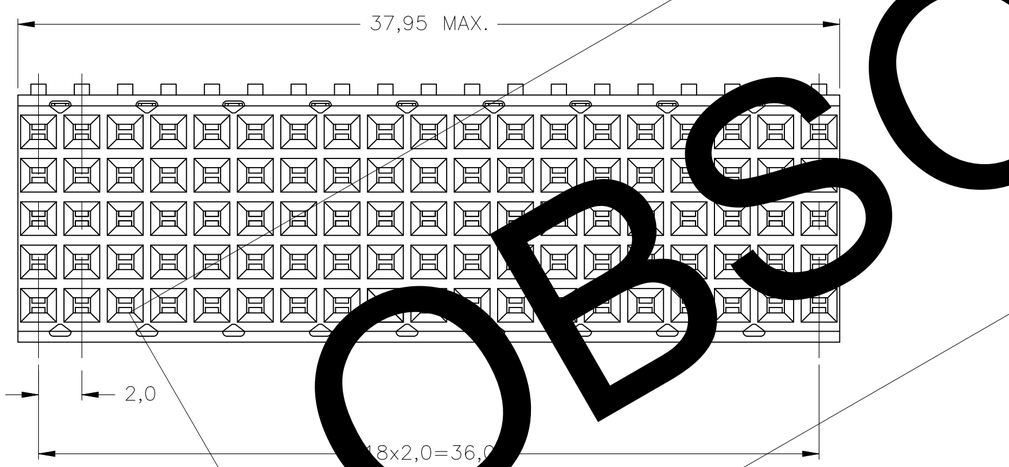

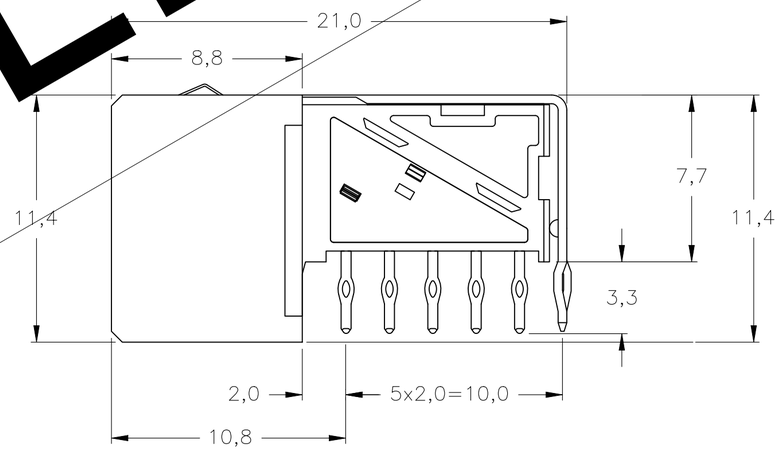

COMPONENT SIDE AS SHOWN
RECOMMENDED PCB–HOLE LAY–OUT
SCALE 2,5:1

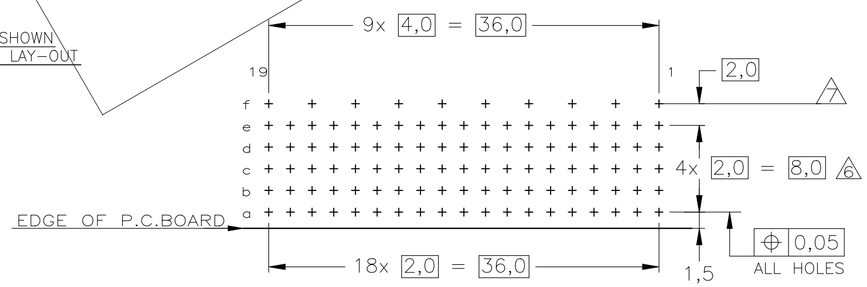

P.C.B. HOLE DIM. COMPLIANT PIN
FOR DETAILS SEE
APPLICATION SPECIFICATION

2 3	1	2170864–1
FINISH	MATERIAL	PARTNUMBER

THIS DRAWING IS A CONTROLLED DOCUMENT.

DIMENSIONS: mm

TOLERANCES UNLESS OTHERWISE SPECIFIED:
0 PLC ± –
1 PLC ± –
2 PLC ± – ±0.2
3 PLC ± –
4 PLC ± –
ANGLES ± –

MATERIAL –
FINISH –

DWN 25NOV2013 SANDERS YAN
CHK –
APVD 25NOV2013 FRANK YANG
PRODUCT SPEC 108–19082
APPLICATION SPEC 114–19029
WEIGHT 0.000000

TE Connectivity

NAME
Z–PACK 2mm HM
TYPE B – 19 COLUMNS
PRE–SHIELDED RECEPTACLE

SIZE	CAGE CODE	DRAWING NO	RESTRICTED TO
A2	00779	C–2170864	–

CUSTOMER DRAWING | SCALE 5:1 | SHEET 1 OF 1 | REV C

2170864

1471–9 (1/15)

OBSOLETE