THIS DRAWING IS UNPUBLISHED. RELEASED FOR PUBLICATION 20
© COPYRIGHT 20 BY - ALL RIGHTS RESERVED.

LOC	DIST
DS	–

REVISIONS

P	LTR	DESCRIPTION	DATE	DWN	APVD
	A	RELEASED	04.JUL'13	SJ	HG

<TABLE 1>

TYPE	FINISH	P/N	WIRE RANGE(mm^2)
.025	PRE-TIN	2005097-1	0.22
		2005427-1	0.3~0.5
	SEL-GOLD	1123343-2	0.22~0.5
.060	PRE-TIN	2109006-1	0.22~0.35
		2109006-2	0.5~0.75
		2109006-3	0.85~1.25
.250	PRE-TIN	1241402-1	0.5~1.0
		1241404-1	>1.0~2.5
		1241406-1	>2.5~4.0

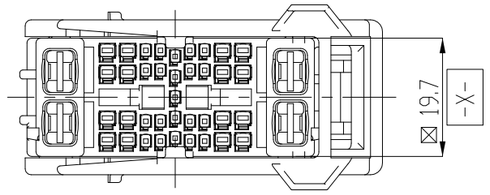

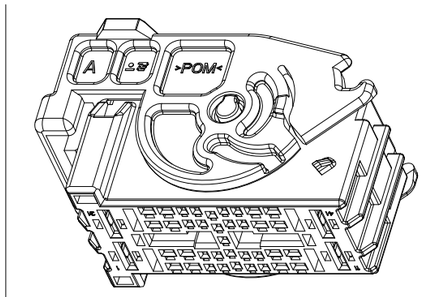

ISO VIEW
SCALE 1:1

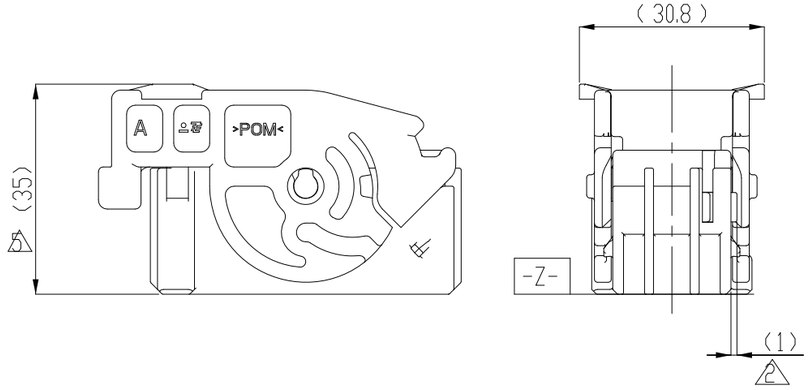

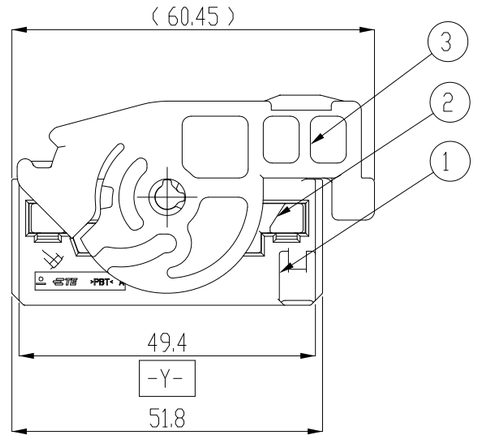

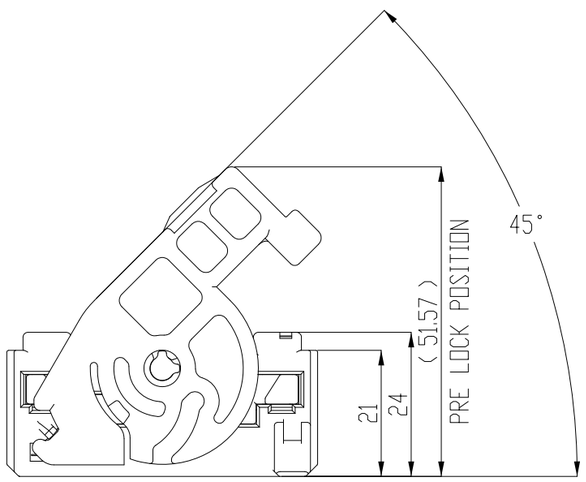

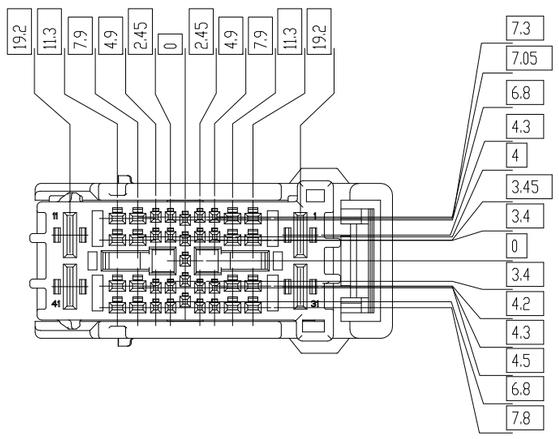

NOTE
1.GENERAL TOLERANCE: ±0.3, ±3°
2.CONDITION OF DELIVERY
DBL IN 1st LOCKING POSITION
3.APPLICABLE CAP ASS'Y P/N:X-2188516-X
4.APPLICABLE RECEPTACLE CONTACT P/N:<TABLE 1>
5.CONDITION OF DELIVERY LEVER

NO	COLOR	MATERIAL	DESCRIPTION	Q'TY
3	GRAY	POM	LEVER HSG	1
2	BLACK	PBT	PLUG DBL HSG	1
1	NATURAL	PBT	PLUG HSG	1

ASS'Y P/N	DESCRIPTION
2188519-1	LIF 41P PLUG ASS'Y

THIS DRAWING IS A CONTROLLED DOCUMENT.

DIMENSIONS: mm

TOLERANCES UNLESS OTHERWISE SPECIFIED

0 PLC	±-
1 PLC	±0.5
2 PLC	±0.13
3 PLC	±0.013
4 PLC	±0.0001
ANGLES	±-

MATERIAL –
FINISH –

DWN SJ CHOI –
CHK KT LIM –
APVD HG CHO –
PRODUCT SPEC –
APPLICATION SPEC –
WEIGHT –

TE Connectivity

NAME – 025/060/250 LIF 41P PLUG ASSY –

SIZE	CAGE CODE	DRAWING NO	RESTRICTED TO
A3	00779	C-2188519	–

CUSTOMER DRAWING | SCALE 1:1 | SHEET 1 OF 1 | REV A

1470-19 (3/11)