THIS DRAWING IS UNPUBLISHED. RELEASED FOR PUBLICATION -,- .
© COPYRIGHT - Tyco Electronics JAPAN G.K. ALL RIGHTS RESERVED.

REVISIONS
変更

P	LTR	DESCRIPTION	DATE	DWN	APVD
	B	REVISED PER ECR-22-153759	17JUL2023	MV	DZ

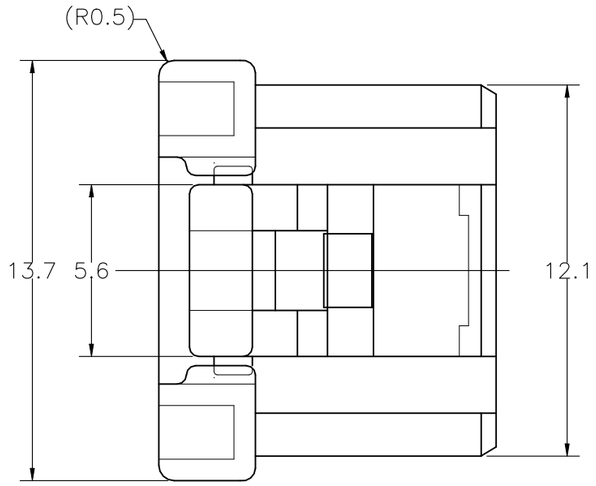

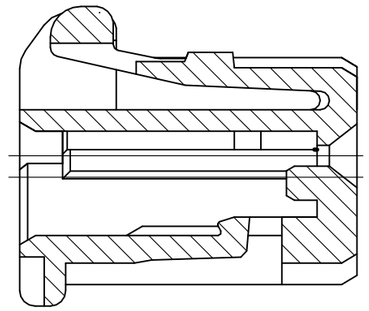

SECT A-A

TYPE OF KEYING

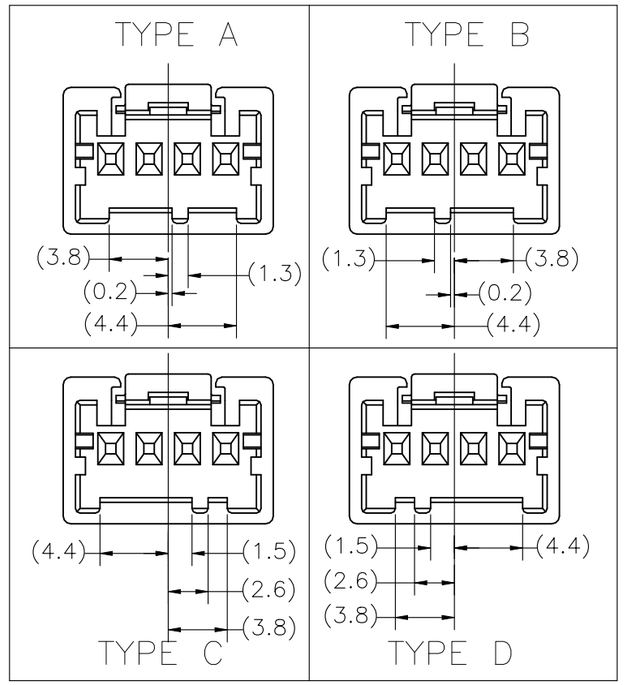

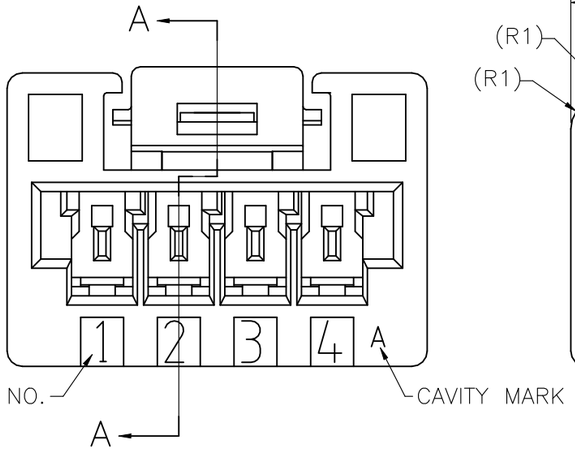

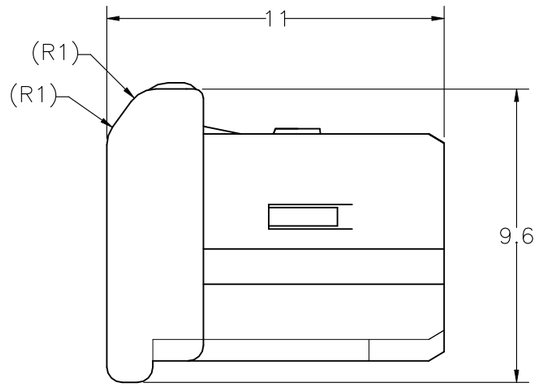

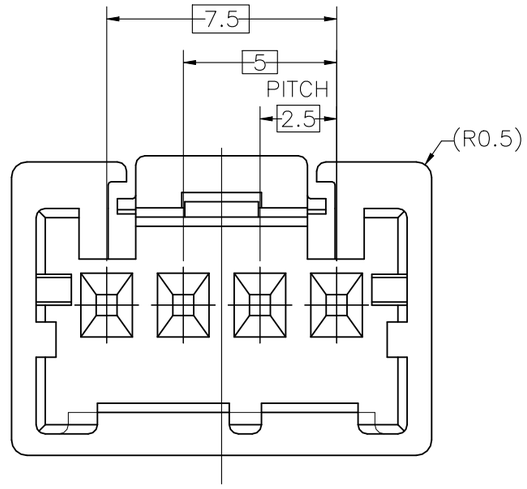

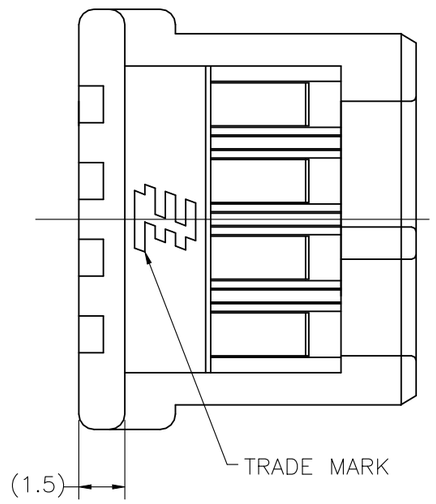

2-2232574-3	TYPE C	BLUE	2-2232569-3
1-2232574-2	TYPE B	RED	1-2232569-2
2232574-1	TYPE A	NATURAL	2232569-1
3 MATING HSG P/N	TYPE OF KEYING	COLOR	PART NUMBER

NOTE
1. GENERAL TOLERANCE:±0.3
2 MATERIAL:PBT GLASS FILLED (UL94V-0)
3 MATING CONN.P/N
CAP HOUSING:SEE TABLE
REC CONTACT:2232576-1

THIS DRAWING IS A CONTROLLED DOCUMENT.

DIMENSIONS: 単位： 粍 mm

TOLERANCES UNLESS OTHERWISE SPECIFIED: 一般公差
0 PLC ±
1 PLC ±
2 PLC ±
3 PLC ±
4 PLC ±
ANGLES ±

MATERIAL 材料: SEE NOTE 2

FINISH 仕上

DWN K.SAKAI 31JAN2017
CHK DANIEL ZHANG 31JAN2017
APVD DANIEL ZHANG 31JAN2017
PRODUCT SPEC 製品規格: 108-78350
APPLICATION SPEC 取付適用規格
WEIGHT 0.89g

TE Connectivity

NAME 名称: GRACE INERTIA CONNECTOR 2.5 W PLUG HOUSING 4P

SIZE A3 | CAGE CODE 00779 | DRAWING NO 番号 C-2232569 | RESTRICTED TO —

CUSTOMER DRAWING | SCALE 尺度 5:1 | SHEET 1 OF 1 | REV B