THIS DRAWING IS UNPUBLISHED. RELEASED FOR PUBLICATION -,- .
© COPYRIGHT - By - ALL RIGHTS RESERVED.

REVISIONS

P	LTR	DESCRIPTION	DATE	DWN	APVD
	A2	ECR-18-009160	14JUN2018	DHC	SBH

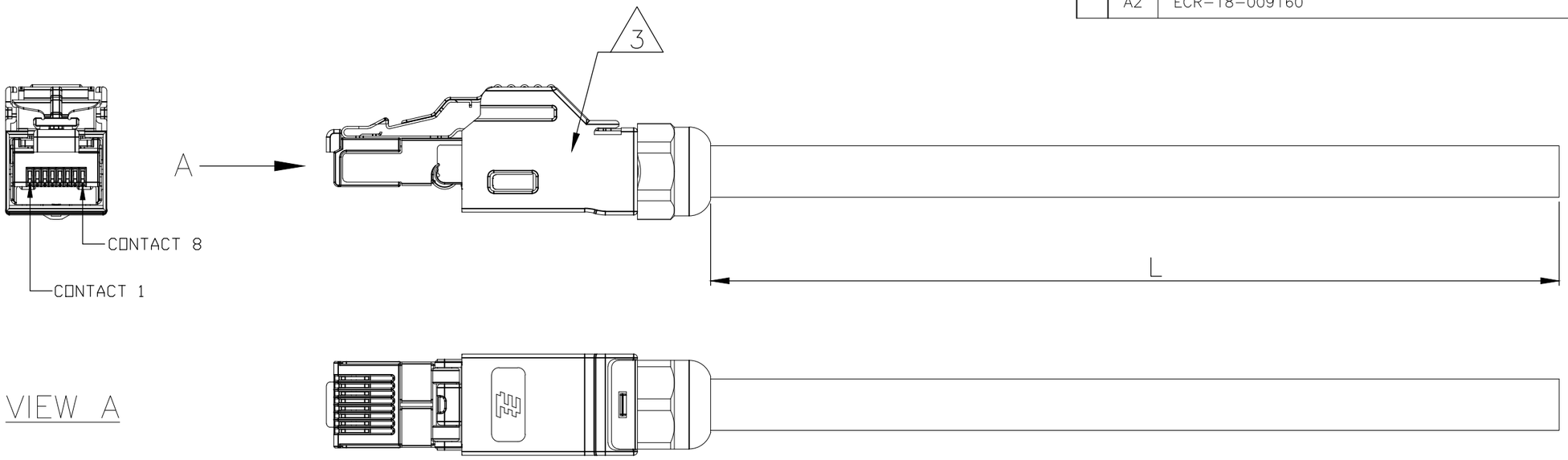

NOTES:

1 PACKAGING: ACC. TO TE SPEC. 107-18032

2 ELECTRICAL TEST ACCORDING TE SPECIFICATION 108-18857.
SHORT-CIRCUIT AND CONTINUITY TEST AT 500V DC, 0.1s

3 WIRING SCHEMA ACC. TO TIA/EIA-568-B AS SHOWN IN WIRING SCHEDULE

WIRING SCHEDULE 3

CAVITY SIDE A	COLOR
1	WH/OG
2	OG
3	WH/GN
4	BU
5	WH/BU
6	GN
7	WH/BN
8	BN

	Length/m	Cable version	TE PN
	10	HiFlex MultiPurpose	1-2300158-6
	5	HiFlex MultiPurpose	1-2300158-5
	3	HiFlex MultiPurpose	1-2300158-4
	2	HiFlex MultiPurpose	1-2300158-3
	1	HiFlex MultiPurpose	1-2300158-2
	0.5	HiFlex MultiPurpose	1-2300158-1
OBSOLETE	10	HI 125°C	~~2300158-6~~
	5	HI 125°C	~~2300158-5~~
	3	HI 125°C	~~2300158-4~~
	2	HI 125°C	~~2300158-3~~
	1	HI 125°C	~~2300158-2~~
	0.5	HI 125°C	~~2300158-1~~

THIS DRAWING IS A CONTROLLED DOCUMENT.

DIMENSIONS: mm

TOLERANCES UNLESS OTHERWISE SPECIFIED:
0 PLC ± -
1 PLC ± -
2 PLC ± -
3 PLC ± -
4 PLC ± -
ANGLES ± 1°

MATERIAL -

FINISH -

DWN SATHISH KUMAR .G 09FEB2016
CHK B.VELDHOVEN 09FEB2016
APVD A.VAN ZANDVOORT 09FEB2016
PRODUCT SPEC 108-78381
APPLICATION SPEC 114-5402
WEIGHT

TE Connectivity

NAME CA IND RJ45STR 8POS PIGTAIL

SIZE A3 | CAGE CODE 00779 | DRAWING NO C-2300158 | RESTRICTED TO —

CUSTOMER DRAWING | SCALE NTS | SHEET 1 OF 1 | REV A2