THIS DRAWING IS UNPUBLISHED
VERTRAULICH - UNVEROEFFENTLICHT ZEICHNUNG
© COPYRIGHT 2017 BY TE Connectivity Germany GmbH
RELEASED FOR PUBLICATION 2017
FREI FUER VEROEFFENTLICHUNG
ALL RIGHTS RESERVED:
ALLE RECHTE VORBEHALTEN.

MATED WITH:
PASSEND ZU: 208-18009

PROJEKT NR.:

REVISIONS
ABAENDERUNGEN

P	LTR	DESCRIPTION BESCHREIBUNG	DATE	DWN	APVD
	A1	NEW DRAWING CREATED	08FEB2017	A.L.	R.F.
	A2	CORRECTION/UPDATE OF BOM SHEET 2	11JAN2018	A.L.	-
	A3	DIMENSIONING ADAPTED TO PROD DRW	24MAR2022	A.L.	D.M.
	B1	ALL VERSIONS GOES TO REV. B	30MAY2023	A.L.	D.M.

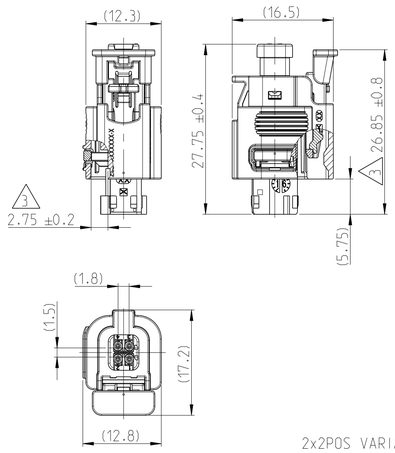

2x2POS VARIANT
BASE PN 2318200

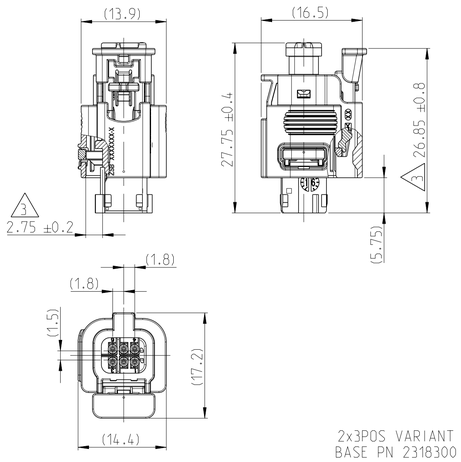

2x3POS VARIANT
BASE PN 2318300

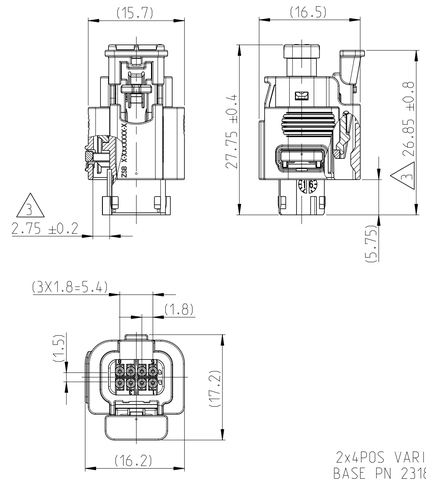

2x4POS VARIANT
BASE PN 2318400

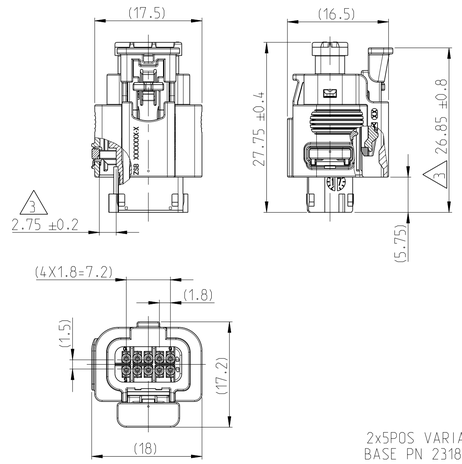

2x5POS VARIANT
BASE PN 2318935

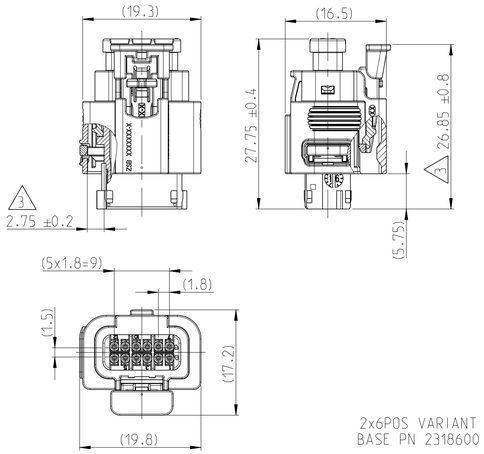

2x6POS VARIANT
BASE PN 2318600

CODINGS VALID FOR ALL VARIANTS / KODIERUNGEN GELTEN FUER ALLE VARIANTEN

CODING A

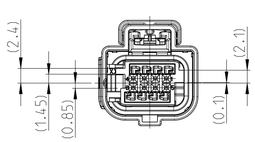

CODING B

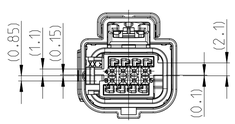

CODING C

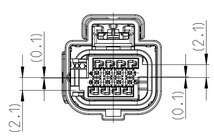

CODING D

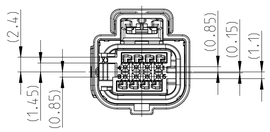

CODING E

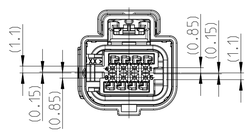

CODING F

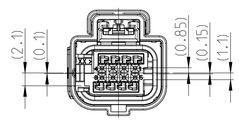

CODING G

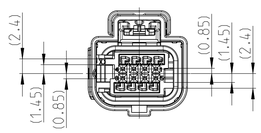

CODING H

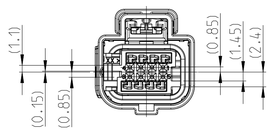

CODING J

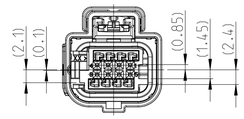

3D VIEW 2x4POSN
3D ANSICHT 2x4POL

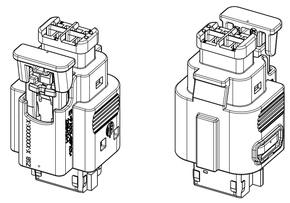

BEMERKUNGEN

1 VERPACKUNG: SCHUETTGUT IN FOLIENBEUTEL 0-740030-3 IM KARTON
0-973058-3 MIT 2x PAPIERPOLSTER 0-740045-3 NACH SPEC. 107-18052

2 ISOLATIONSDURCHMESSER: VON 0.95mm BIS 1.3mm

3 AUSLIEFERZUSTAND:
2TE KONTAKSICHERUNG MUSS IN VORRASTSTELLUNG SEIN
CPA MUSS IN VORRASTSTELLUNG SEIN

4 PRODUKTGRUPPENZEICHNUNG DER ZWEIREIHIGEN MCON 0.5 BUCHSENSTECKER,
PASSEND FUER AK-SCHNITTSTELLENSTANDARD 208-18009 / V1 UND V2 (0° VERSION)

NOTES

1 PACKING: BULK MATERIAL IN PLASTIC BAG 0-740030-3 AND SHIPPING BOX
0-973058-3 WITH 2x PAPER CUSHION 0-740045-3 ACC. SPEC.107-18052

2 INSULATION DIAMETER: FROM 0.95mm TO 1.3mm

3 DELIVERY STATUS:
SECONDARY LOCK MUST BE IN PRE LOCK POSITION
CPA MUST BE IN PRE LOCK POSITION

4 PRODUCT GROUP DRAWING OF THE DUAL ROW MCON 0.5 SOCKET HOUSING
MATCHING WITH THE AK-INTERFACE STANDARD 208-18009 / V1 AND V2 (0° VERSION)

CONTACTS: MCON 0.5 CB KONTAKTE: MCON 0.5 CB	SEE DRW. 2177908 2177909	XXX
SPECIAL UNLOCKING TOOLS SPEZIELLE ENTRIEGELUNGS-WERKZEUGE	RETAINER: 5-1579028-1 CONTACT: 8-1579007-9 2-1579028-8	XXX
TO BE USED WITH ZU VERWENDEN MIT	XXX	XXX
PACKING VERPACKUNG	BULK PACKAGING SCHUETTGUT	XXX
FITTING BLINDPLUGS PASSENDE BLINDSTOPFEN	2236139-1	XXX
COUNTERPART GEGENSTUECK	XXX	XXX
INTERFACE SCHNITTSTELLE	208-18009	XXX
PRODUCT-SPEC. PRODUKT-SPEZ.	108-94610	XXX
APPLICATION-SPEC. VERARBEITUNGS-SPEZ.	114-94496	XXX
	TE CONNECTIVITY NO. TE CONNECTIVITY NR.	OVP PART FREMDTEIL

THIS DRAWING IS A CONTROLLED DOCUMENT.
DIMENSIONING AND TOLERANCING PER GPS (ISO STANDARDS).

DIMENSIONS: MASSEINHEITEN: mm

TOLERANCES UNLESS OTHERWISE SPECIFIED: ALLGEMEINTOLERANZEN
0 PLC ±
1 PLC ±
2 PLC ±
3 PLC ±
4 PLC ±
ANGLES/WINKEL ±1°

MATERIAL
-
-

FINISH/OBERFLAECHE/FARBE
-
-

DWN 08FEB2017 A.LEONHARD
CHK 24FEB2017 R.FORELL
APVD -
PRODUCT SPEC PRODUKTSPEZ. -
APPLICATION SPEC VERARBEITUNGSSPEZ. -
WEIGHT GEWICHT -

TE Connectivity

NAME
2-REIHIGE MCON 0.5 BUCHSENSTECKER
DUAL ROW MCON 0.5 RECEPTACLE HSG

SIZE A1 | CAGE CODE 00779 | DRAWING NO ZEICHNUNGS-NR. C-2318000 | RESTRICTED TO NUR FUER

CUSTOMER DRAWING /KUNDENZEICHNUNG | SCALE MASSSTAB 2:1 | SHEET BLATT 1 OF VON 2 | REV B1

printed on 24 Jul 2023 15:22 (MHieleurop from EG013134)

THIS DRAWING IS UNPUBLISHED
VERTRAULICH - UNVEROEFFENTLICHT ZEICHNUNG
© COPYRIGHT 2017 BY TE Connectivity Germany GmbH
RELEASED FOR PUBLICATION 2017
FREI FUER VEROEFFENTLICHUNG
ALL RIGHTS RESERVED:
ALLE RECHTE VORBEHALTEN.
MATED WITH:
PASSEND ZU:
208-18009

PROJEKT NR.: -

REVISIONS
ANDERUNGEN

P	LTR	DESCRIPTION BESCHREIBUNG	DATE	DWN	APVD
	-	SEE SHEET 1	-	-	-

2X3POS.MCON 0.5.REC HSG ASSY.SLD

TE-ASSY-NO. TE-ZSB.-NR.	ASSY REV ZSB. REV	TE-PART-NO. TE-TEILE-NR.	REV	CODING KODIERUNG	MATERIAL	DESCRIPTION BENNENUNG	COLOR FARBE	QTY. MENGE	ITEM NO. ITEM NR.
2318300-9	A	1-2300154-1	A	J	PA66-GF30	CPA	RED	1	6
		2318222-2	A		PA66-GF30	TPA REC HSG.6POS.MCON 0.5	PURPLE	1	5
		2318321-1	B		SILICONE HTV	FAMILY SEAL.MCON 0.5.2X3POS	BLUE	1	4
		2318320-1	A		SILICONE LR	PERIPHERAL SEAL.7.2LEN X 5.4W IDTH	RED BROWN	1	3
		2318324-1	A		PA66-GF30	REC CONN CVR.6POS.MCON 0.5.TWO ROW	BLACK	1	2
		2318323-9	A		PA66-GF30	6POS.MCON 0.5.REC HSG.SLD.COD J.TWO ROW	CURRY	1	1
2318300-8	A	1-2300154-1	A	H	PA66-GF30	CPA	RED	1	6
		2318222-2	A		PA66-GF30	TPA REC HSG.6POS.MCON 0.5	PURPLE	1	5
		2318321-1	B		SILICONE HTV	FAMILY SEAL.MCON 0.5.2X3POS	BLUE	1	4
		2318320-1	A		SILICONE LR	PERIPHERAL SEAL.7.2LEN X 5.4W IDTH	RED BROWN	1	3
		2318324-1	A		PA66-GF30	REC CONN CVR.6POS.MCON 0.5.TWO ROW	BLACK	1	2
		2318323-8	A		PA66-GF30	6POS.MCON 0.5.REC HSG.SLD.COD H.TWO ROW	BEIGE	1	1
2318300-7	A	1-2300154-1	A	G	PA66-GF30	CPA	RED	1	6
		2318222-2	A		PA66-GF30	TPA REC HSG.6POS.MCON 0.5	PURPLE	1	5
		2318321-1	B		SILICONE HTV	FAMILY SEAL.MCON 0.5.2X3POS	BLUE	1	4
		2318320-1	A		SILICONE LR	PERIPHERAL SEAL.7.2LEN X 5.4W IDTH	RED BROWN	1	3
		2318324-1	A		PA66-GF30	REC CONN CVR.6POS.MCON 0.5.TWO ROW	BLACK	1	2
		2318323-7	A		PA66-GF30	6POS.MCON 0.5.REC HSG.SLD.COD G.TWO ROW	LIGHT PINK	1	1
2318300-6	A	1-2300154-1	A	F	PA66-GF30	CPA	RED	1	6
		2318222-2	A		PA66-GF30	TPA REC HSG.6POS.MCON 0.5	PURPLE	1	5
		2318321-1	B		SILICONE HTV	FAMILY SEAL.MCON 0.5.2X3POS	BLUE	1	4
		2318320-1	A		SILICONE LR	PERIPHERAL SEAL.7.2LEN X 5.4W IDTH	RED BROWN	1	3
		2318324-1	A		PA66-GF30	REC CONN CVR.6POS.MCON 0.5.TWO ROW	BLACK	1	2
		2318323-6	A		PA66-GF30	6POS.MCON 0.5.REC HSG.SLD.COD F.TWO ROW	GREY	1	1
2318300-5	A	1-2300154-1	A	E	PA66-GF30	CPA	RED	1	6
		2318222-2	A		PA66-GF30	TPA REC HSG.6POS.MCON 0.5	PURPLE	1	5
		2318321-1	B		SILICONE HTV	FAMILY SEAL.MCON 0.5.2X3POS	BLUE	1	4
		2318320-1	A		SILICONE LR	PERIPHERAL SEAL.7.2LEN X 5.4W IDTH	RED BROWN	1	3
		2318324-1	A		PA66-GF30	REC CONN CVR.6POS.MCON 0.5.TWO ROW	BLACK	1	2
		2318323-5	A		PA66-GF30	6POS.MCON 0.5.REC HSG.SLD.COD E.TWO ROW	BROWN	1	1
2318300-4	A	1-2300154-1	A	D	PA66-GF30	CPA	RED	1	6
		2318222-2	A		PA66-GF30	TPA REC HSG.6POS.MCON 0.5	PURPLE	1	5
		2318321-1	B		SILICONE HTV	FAMILY SEAL.MCON 0.5.2X3POS	BLUE	1	4
		2318320-1	A		SILICONE LR	PERIPHERAL SEAL.7.2LEN X 5.4W IDTH	RED BROWN	1	3
		2318324-1	A		PA66-GF30	REC CONN CVR.6POS.MCON 0.5.TWO ROW	BLACK	1	2
		2318323-4	A		PA66-GF30	6POS.MCON 0.5.REC HSG.SLD.COD D.TWO ROW	GREEN	1	1
2318300-3	A	1-2300154-1	A	C	PA66-GF30	CPA	RED	1	6
		2318222-2	A		PA66-GF30	TPA REC HSG.6POS.MCON 0.5	PURPLE	1	5
		2318321-1	B		SILICONE HTV	FAMILY SEAL.MCON 0.5.2X3POS	BLUE	1	4
		2318320-1	A		SILICONE LR	PERIPHERAL SEAL.7.2LEN X 5.4W IDTH	RED BROWN	1	3
		2318324-1	A		PA66-GF30	REC CONN CVR.6POS.MCON 0.5.TWO ROW	BLACK	1	2
		2318323-3	A		PA66-GF30	6POS.MCON 0.5.REC HSG.SLD.COD C.TWO ROW	BLUE	1	1
2318300-2	B	1-2300154-1	A	B	PA66-GF30	CPA	RED	1	6
		2318222-2	A		PA66-GF30	TPA REC HSG.6POS.MCON 0.5	PURPLE	1	5
		2318321-1	B		SILICONE HTV	FAMILY SEAL.MCON 0.5.2X3POS	BLUE	1	4
		2318320-1	A		SILICONE LR	PERIPHERAL SEAL.7.2LEN X 5.4W IDTH	RED BROWN	1	3
		2318324-1	A		PA66-GF30	REC CONN CVR.6POS.MCON 0.5.TWO ROW	BLACK	1	2
		2318323-2	A		PA66-GF30	6POS.MCON 0.5.REC HSG.SLD.COD B.TWO ROW	NATURAL	1	1
2318300-1	B	1-2300154-1	A	A	PA66-GF30	CPA	RED	1	6
		2318222-2	A		PA66-GF30	TPA REC HSG.6POS.MCON 0.5	PURPLE	1	5
		2318321-1	B		SILICONE HTV	FAMILY SEAL.MCON 0.5.2X3POS	BLUE	1	4
		2318320-1	A		SILICONE LR	PERIPHERAL SEAL.7.2LEN X 5.4W IDTH	RED BROWN	1	3
		2318324-1	A		PA66-GF30	REC CONN CVR.6POS.MCON 0.5.TWO ROW	BLACK	1	2
		2318323-1	A		PA66-GF30	6POS.MCON 0.5.REC HSG.SLD.COD A.TWO ROW	BLACK	1	1

2X2POS.MCON 0.5.REC HSG ASSY.SLD

TE-ASSY-NO. TE-ZSB.-NR.	ASSY REV ZSB. REV	TE-PART-NO. TE-TEILE-NR.	REV	CODING KODIERUNG	MATERIAL	DESCRIPTION BENNENUNG	COLOR FARBE	QTY. MENGE	ITEM NO. ITEM NR.
2318200-9	A	1-2300154-1	A	J	PA66-GF30	CPA	RED	1	6
		2318222-1	A		PA66-GF30	TPA REC HSG.2X2POS.MCON 0.5	PURPLE	1	5
		2318221-1	B		SILICONE HTV	FAMILY SEAL.MCON 0.5.2X2POS	BLUE	1	4
		2318220-1	A		SILICONE LR	PERIPHERAL SEAL.5.4LEN X 5.4W IDTH	RED BROWN	1	3
		2318224-1	A		PA66-GF30	REC CONN CVR.4POS.MCON 0.5.TWO ROW	BLACK	1	2
		2318223-9	A		PA66-GF30	4POS.MCON 0.5.REC HSG.SLD.COD J.TWO ROW	CURRY	1	1
2318200-8	A	1-2300154-1	A	H	PA66-GF30	CPA	RED	1	6
		2318222-1	A		PA66-GF30	TPA REC HSG.2X2POS.MCON 0.5	PURPLE	1	5
		2318221-1	B		SILICONE HTV	FAMILY SEAL.MCON 0.5.2X2POS	BLUE	1	4
		2318220-1	A		SILICONE LR	PERIPHERAL SEAL.5.4LEN X 5.4W IDTH	RED BROWN	1	3
		2318224-1	A		PA66-GF30	REC CONN CVR.4POS.MCON 0.5.TWO ROW	BLACK	1	2
		2318223-8	A		PA66-GF30	4POS.MCON 0.5.REC HSG.SLD.COD H.TWO ROW	BEIGE	1	1
2318200-7	A	1-2300154-1	A	G	PA66-GF30	CPA	RED	1	6
		2318222-1	A		PA66-GF30	TPA REC HSG.2X2POS.MCON 0.5	PURPLE	1	5
		2318221-1	B		SILICONE HTV	FAMILY SEAL.MCON 0.5.2X2POS	BLUE	1	4
		2318220-1	A		SILICONE LR	PERIPHERAL SEAL.5.4LEN X 5.4W IDTH	RED BROWN	1	3
		2318224-1	A		PA66-GF30	REC CONN CVR.4POS.MCON 0.5.TWO ROW	BLACK	1	2
		2318223-7	A		PA66-GF30	4POS.MCON 0.5.REC HSG.SLD.COD G.TWO ROW	LIGHT PINK	1	1
2318200-6	A	1-2300154-1	A	F	PA66-GF30	CPA	RED	1	6
		2318222-1	A		PA66-GF30	TPA REC HSG.2X2POS.MCON 0.5	PURPLE	1	5
		2318221-1	B		SILICONE HTV	FAMILY SEAL.MCON 0.5.2X2POS	BLUE	1	4
		2318220-1	A		SILICONE LR	PERIPHERAL SEAL.5.4LEN X 5.4W IDTH	RED BROWN	1	3
		2318224-1	A		PA66-GF30	REC CONN CVR.4POS.MCON 0.5.TWO ROW	BLACK	1	2
		2318223-6	A		PA66-GF30	4POS.MCON 0.5.REC HSG.SLD.COD F.TWO ROW	GREY	1	1
2318200-5	A	1-2300154-1	A	E	PA66-GF30	CPA	RED	1	6
		2318222-1	A		PA66-GF30	TPA REC HSG.2X2POS.MCON 0.5	PURPLE	1	5
		2318221-1	B		SILICONE HTV	FAMILY SEAL.MCON 0.5.2X2POS	BLUE	1	4
		2318220-1	A		SILICONE LR	PERIPHERAL SEAL.5.4LEN X 5.4W IDTH	RED BROWN	1	3
		2318224-1	A		PA66-GF30	REC CONN CVR.4POS.MCON 0.5.TWO ROW	BLACK	1	2
		2318223-5	A		PA66-GF30	4POS.MCON 0.5.REC HSG.SLD.COD E.TWO ROW	BROWN	1	1
2318200-4	A	1-2300154-1	A	D	PA66-GF30	CPA	RED	1	6
		2318222-1	A		PA66-GF30	TPA REC HSG.2X2POS.MCON 0.5	PURPLE	1	5
		2318221-1	B		SILICONE HTV	FAMILY SEAL.MCON 0.5.2X2POS	BLUE	1	4
		2318220-1	A		SILICONE LR	PERIPHERAL SEAL.5.4LEN X 5.4W IDTH	RED BROWN	1	3
		2318224-1	A		PA66-GF30	REC CONN CVR.4POS.MCON 0.5.TWO ROW	BLACK	1	2
		2318223-4	A		PA66-GF30	4POS.MCON 0.5.REC HSG.SLD.COD D.TWO ROW	GREEN	1	1
2318200-3	A	1-2300154-1	A	C	PA66-GF30	CPA	RED	1	6
		2318222-1	A		PA66-GF30	TPA REC HSG.2X2POS.MCON 0.5	PURPLE	1	5
		2318221-1	B		SILICONE HTV	FAMILY SEAL.MCON 0.5.2X2POS	BLUE	1	4
		2318220-1	A		SILICONE LR	PERIPHERAL SEAL.5.4LEN X 5.4W IDTH	RED BROWN	1	3
		2318224-1	A		PA66-GF30	REC CONN CVR.4POS.MCON 0.5.TWO ROW	BLACK	1	2
		2318223-3	A		PA66-GF30	4POS.MCON 0.5.REC HSG.SLD.COD C.TWO ROW	BLUE	1	1
2318200-2	B	1-2300154-1	A	B	PA66-GF30	CPA	RED	1	6
		2318222-1	A		PA66-GF30	TPA REC HSG.2X2POS.MCON 0.5	PURPLE	1	5
		2318221-1	B		SILICONE HTV	FAMILY SEAL.MCON 0.5.2X2POS	BLUE	1	4
		2318220-1	A		SILICONE LR	PERIPHERAL SEAL.5.4LEN X 5.4W IDTH	RED BROWN	1	3
		2318224-1	A		PA66-GF30	REC CONN CVR.4POS.MCON 0.5.TWO ROW	BLACK	1	2
		2318223-2	A		PA66-GF30	4POS.MCON 0.5.REC HSG.SLD.COD B.TWO ROW	NATURAL	1	1
2318200-1	B	1-2300154-1	A	A	PA66-GF30	CPA	RED	1	6
		2318222-1	A		PA66-GF30	TPA REC HSG.2X2POS.MCON 0.5	PURPLE	1	5
		2318221-1	B		SILICONE HTV	FAMILY SEAL.MCON 0.5.2X2POS	BLUE	1	4
		2318220-1	A		SILICONE LR	PERIPHERAL SEAL.5.4LEN X 5.4W IDTH	RED BROWN	1	3
		2318224-1	A		PA66-GF30	REC CONN CVR.4POS.MCON 0.5.TWO ROW	BLACK	1	2
		2318223-1	A		PA66-GF30	4POS.MCON 0.5.REC HSG.SLD.COD A.TWO ROW	BLACK	1	1

2X5POS.MCON 0.5.REC HSG ASSY.SLD

TE-ASSY-NO. TE-ZSB.-NR.	ASSY REV ZSB. REV	TE-PART-NO. TE-TEILE-NR.	REV	CODING KODIERUNG	MATERIAL	DESCRIPTION BENNENUNG	COLOR FARBE	QTY. MENGE	ITEM NO. ITEM NR.
2318935-9	A	1-2300154-1	A	J	PA66-GF30	CPA	RED	1	6
		2318222-4	A		PA66-GF30	TPA REC HSG.10POS.MCON 0.5	PURPLE	1	5
		2318948-1	B		SILICONE HTV	FAMILY SEAL.MCON 0.5.2X5POS	BLUE	1	4
		2318947-1	A		SILICONE LR	PERIPHERAL SEAL.10.8LEN X 5.4W IDTH	RED BROWN	1	3
		2318945-1	A		PA66-GF30	REC CONN CVR.10POS.MCON 0.5.TWO ROW	BLACK	1	2
		2318944-9	A		PA66-GF30	10POS.MCON 0.5.REC HSG.SLD.COD J.TWO ROW	CURRY	1	1
2318935-8	A	1-2300154-1	A	H	PA66-GF30	CPA	RED	1	6
		2318222-4	A		PA66-GF30	TPA REC HSG.10POS.MCON 0.5	PURPLE	1	5
		2318948-1	B		SILICONE HTV	FAMILY SEAL.MCON 0.5.2X5POS	BLUE	1	4
		2318947-1	A		SILICONE LR	PERIPHERAL SEAL.10.8LEN X 5.4W IDTH	RED BROWN	1	3
		2318945-1	A		PA66-GF30	REC CONN CVR.10POS.MCON 0.5.TWO ROW	BLACK	1	2
		2318944-8	A		PA66-GF30	10POS.MCON 0.5.REC HSG.SLD.COD H.TWO ROW	BEIGE	1	1
2318935-7	A	1-2300154-1	A	G	PA66-GF30	CPA	RED	1	6
		2318222-4	A		PA66-GF30	TPA REC HSG.10POS.MCON 0.5	PURPLE	1	5
		2318948-1	B		SILICONE HTV	FAMILY SEAL.MCON 0.5.2X5POS	BLUE	1	4
		2318947-1	A		SILICONE LR	PERIPHERAL SEAL.10.8LEN X 5.4W IDTH	RED BROWN	1	3
		2318945-1	A		PA66-GF30	REC CONN CVR.10POS.MCON 0.5.TWO ROW	BLACK	1	2
		2318944-7	A		PA66-GF30	10POS.MCON 0.5.REC HSG.SLD.COD G.TWO ROW	LIGHT PINK	1	1
2318935-6	A	1-2300154-1	A	F	PA66-GF30	CPA	RED	1	6
		2318222-4	A		PA66-GF30	TPA REC HSG.10POS.MCON 0.5	PURPLE	1	5
		2318948-1	B		SILICONE HTV	FAMILY SEAL.MCON 0.5.2X5POS	BLUE	1	4
		2318947-1	A		SILICONE LR	PERIPHERAL SEAL.10.8LEN X 5.4W IDTH	RED BROWN	1	3
		2318945-1	A		PA66-GF30	REC CONN CVR.10POS.MCON 0.5.TWO ROW	BLACK	1	2
		2318944-6	A		PA66-GF30	10POS.MCON 0.5.REC HSG.SLD.COD F.TWO ROW	GREY	1	1
2318935-5	A	1-2300154-1	A	E	PA66-GF30	CPA	RED	1	6
		2318222-4	A		PA66-GF30	TPA REC HSG.10POS.MCON 0.5	PURPLE	1	5
		2318948-1	B		SILICONE HTV	FAMILY SEAL.MCON 0.5.2X5POS	BLUE	1	4
		2318947-1	A		SILICONE LR	PERIPHERAL SEAL.10.8LEN X 5.4W IDTH	RED BROWN	1	3
		2318945-1	A		PA66-GF30	REC CONN CVR.10POS.MCON 0.5.TWO ROW	BLACK	1	2
		2318944-5	A		PA66-GF30	10POS.MCON 0.5.REC HSG.SLD.COD E.TWO ROW	BROWN	1	1
2318935-4	A	1-2300154-1	A	D	PA66-GF30	CPA	RED	1	6
		2318222-4	A		PA66-GF30	TPA REC HSG.10POS.MCON 0.5	PURPLE	1	5
		2318948-1	B		SILICONE HTV	FAMILY SEAL.MCON 0.5.2X5POS	BLUE	1	4
		2318947-1	A		SILICONE LR	PERIPHERAL SEAL.10.8LEN X 5.4W IDTH	RED BROWN	1	3
		2318945-1	A		PA66-GF30	REC CONN CVR.10POS.MCON 0.5.TWO ROW	BLACK	1	2
		2318944-4	A		PA66-GF30	10POS.MCON 0.5.REC HSG.SLD.COD D.TWO ROW	GREEN	1	1
2318935-3	A	1-2300154-1	A	C	PA66-GF30	CPA	RED	1	6
		2318222-4	A		PA66-GF30	TPA REC HSG.10POS.MCON 0.5	PURPLE	1	5
		2318948-1	B		SILICONE HTV	FAMILY SEAL.MCON 0.5.2X5POS	BLUE	1	4
		2318947-1	A		SILICONE LR	PERIPHERAL SEAL.10.8LEN X 5.4W IDTH	RED BROWN	1	3
		2318945-1	A		PA66-GF30	REC CONN CVR.10POS.MCON 0.5.TWO ROW	BLACK	1	2
		2318944-3	A		PA66-GF30	10POS.MCON 0.5.REC HSG.SLD.COD C.TWO ROW	BLUE	1	1
2318935-2	B	1-2300154-1	A	B	PA66-GF30	CPA	RED	1	6
		2318222-4	A		PA66-GF30	TPA REC HSG.10POS.MCON 0.5	PURPLE	1	5
		2318948-1	B		SILICONE HTV	FAMILY SEAL.MCON 0.5.2X5POS	BLUE	1	4
		2318947-1	A		SILICONE LR	PERIPHERAL SEAL.10.8LEN X 5.4W IDTH	RED BROWN	1	3
		2318945-1	A		PA66-GF30	REC CONN CVR.10POS.MCON 0.5.TWO ROW	BLACK	1	2
		2318944-2	A		PA66-GF30	10POS.MCON 0.5.REC HSG.SLD.COD B.TWO ROW	NATURAL	1	1
2318935-1	B	1-2300154-1	A	A	PA66-GF30	CPA	RED	1	6
		2318222-4	A		PA66-GF30	TPA REC HSG.10POS.MCON 0.5	PURPLE	1	5
		2318948-1	B		SILICONE HTV	FAMILY SEAL.MCON 0.5.2X5POS	BLUE	1	4
		2318947-1	A		SILICONE LR	PERIPHERAL SEAL.10.8LEN X 5.4W IDTH	RED BROWN	1	3
		2318945-1	A		PA66-GF30	REC CONN CVR.10POS.MCON 0.5.TWO ROW	BLACK	1	2
		2318944-1	A		PA66-GF30	10POS.MCON 0.5.REC HSG.SLD.COD A.TWO ROW	BLACK	1	1

2X4POS.MCON 0.5.REC HSG ASSY.SLD

TE-ASSY-NO. TE-ZSB.-NR.	ASSY REV ZSB. REV	TE-PART-NO. TE-TEILE-NR.	REV	CODING KODIERUNG	MATERIAL	DESCRIPTION BENNENUNG	COLOR FARBE	QTY. MENGE	ITEM NO. ITEM NR.
2318400-9	A	1-2300154-1	A	J	PA66-GF30	CPA	RED	1	6
		2318222-3	A		PA66-GF30	TPA REC HSG.8POS.MCON 0.5	PURPLE	1	5
		2318421-1	B		SILICONE HTV	FAMILY SEAL.MCON 0.5.2X4POS	BLUE	1	4
		2318420-1	A		SILICONE LR	PERIPHERAL SEAL.9LEN X 5.4W IDTH	RED BROWN	1	3
		2318424-1	A		PA66-GF30	REC CONN CVR.8POS.MCON 0.5.TWO ROW	BLACK	1	2
		2318423-9	A		PA66-GF30	8POS.MCON 0.5.REC HSG.SLD.COD J.TWO ROW	CURRY	1	1
2318400-8	A	1-2300154-1	A	H	PA66-GF30	CPA	RED	1	6
		2318222-3	A		PA66-GF30	TPA REC HSG.8POS.MCON 0.5	PURPLE	1	5
		2318421-1	B		SILICONE HTV	FAMILY SEAL.MCON 0.5.2X4POS	BLUE	1	4
		2318420-1	A		SILICONE LR	PERIPHERAL SEAL.9LEN X 5.4W IDTH	RED BROWN	1	3
		2318424-1	A		PA66-GF30	REC CONN CVR.8POS.MCON 0.5.TWO ROW	BLACK	1	2
		2318423-8	A		PA66-GF30	8POS.MCON 0.5.REC HSG.SLD.COD H.TWO ROW	BEIGE	1	1
2318400-7	A	1-2300154-1	A	G	PA66-GF30	CPA	RED	1	6
		2318222-3	A		PA66-GF30	TPA REC HSG.8POS.MCON 0.5	PURPLE	1	5
		2318421-1	B		SILICONE HTV	FAMILY SEAL.MCON 0.5.2X4POS	BLUE	1	4
		2318420-1	A		SILICONE LR	PERIPHERAL SEAL.9LEN X 5.4W IDTH	RED BROWN	1	3
		2318424-1	A		PA66-GF30	REC CONN CVR.8POS.MCON 0.5.TWO ROW	BLACK	1	2
		2318423-7	A		PA66-GF30	8POS.MCON 0.5.REC HSG.SLD.COD G.TWO ROW	LIGHT PINK	1	1
2318400-6	A	1-2300154-1	A	F	PA66-GF30	CPA	RED	1	6
		2318222-3	A		PA66-GF30	TPA REC HSG.8POS.MCON 0.5	PURPLE	1	5
		2318421-1	B		SILICONE HTV	FAMILY SEAL.MCON 0.5.2X4POS	BLUE	1	4
		2318420-1	A		SILICONE LR	PERIPHERAL SEAL.9LEN X 5.4W IDTH	RED BROWN	1	3
		2318424-1	A		PA66-GF30	REC CONN CVR.8POS.MCON 0.5.TWO ROW	BLACK	1	2
		2318423-6	A		PA66-GF30	8POS.MCON 0.5.REC HSG.SLD.COD F.TWO ROW	GREY	1	1
2318400-5	A	1-2300154-1	A	E	PA66-GF30	CPA	RED	1	6
		2318222-3	A		PA66-GF30	TPA REC HSG.8POS.MCON 0.5	PURPLE	1	5
		2318421-1	B		SILICONE HTV	FAMILY SEAL.MCON 0.5.2X4POS	BLUE	1	4
		2318420-1	A		SILICONE LR	PERIPHERAL SEAL.9LEN X 5.4W IDTH	RED BROWN	1	3
		2318424-1	A		PA66-GF30	REC CONN CVR.8POS.MCON 0.5.TWO ROW	BLACK	1	2
		2318423-5	A		PA66-GF30	8POS.MCON 0.5.REC HSG.SLD.COD E.TWO ROW	BROWN	1	1
2318400-4	A	1-2300154-1	A	D	PA66-GF30	CPA	RED	1	6
		2318222-3	A		PA66-GF30	TPA REC HSG.8POS.MCON 0.5	PURPLE	1	5
		2318421-1	B		SILICONE HTV	FAMILY SEAL.MCON 0.5.2X4POS	BLUE	1	4
		2318420-1	A		SILICONE LR	PERIPHERAL SEAL.9LEN X 5.4W IDTH	RED BROWN	1	3
		2318424-1	A		PA66-GF30	REC CONN CVR.8POS.MCON 0.5.TWO ROW	BLACK	1	2
		2318423-4	A		PA66-GF30	8POS.MCON 0.5.REC HSG.SLD.COD D.TWO ROW	GREEN	1	1
2318400-3	A	1-2300154-1	A	C	PA66-GF30	CPA	RED	1	6
		2318222-3	A		PA66-GF30	TPA REC HSG.8POS.MCON 0.5	PURPLE	1	5
		2318421-1	B		SILICONE HTV	FAMILY SEAL.MCON 0.5.2X4POS	BLUE	1	4
		2318420-1	A		SILICONE LR	PERIPHERAL SEAL.9LEN X 5.4W IDTH	RED BROWN	1	3
		2318424-1	A		PA66-GF30	REC CONN CVR.8POS.MCON 0.5.TWO ROW	BLACK	1	2
		2318423-3	A		PA66-GF30	8POS.MCON 0.5.REC HSG.SLD.COD C.TWO ROW	BLUE	1	1
2318400-2	B	1-2300154-1	A	B	PA66-GF30	CPA	RED	1	6
		2318222-3	A		PA66-GF30	TPA REC HSG.8POS.MCON 0.5	PURPLE	1	5
		2318421-1	B		SILICONE HTV	FAMILY SEAL.MCON 0.5.2X4POS	BLUE	1	4
		2318420-1	A		SILICONE LR	PERIPHERAL SEAL.9LEN X 5.4W IDTH	RED BROWN	1	3
		2318424-1	A		PA66-GF30	REC CONN CVR.8POS.MCON 0.5.TWO ROW	BLACK	1	2
		2318423-2	A		PA66-GF30	8POS.MCON 0.5.REC HSG.SLD.COD B.TWO ROW	NATURAL	1	1
2318400-1	B	1-2300154-1	A	A	PA66-GF30	CPA	RED	1	6
		2318222-3	A		PA66-GF30	TPA REC HSG.8POS.MCON 0.5	PURPLE	1	5
		2318421-1	B		SILICONE HTV	FAMILY SEAL.MCON 0.5.2X4POS	BLUE	1	4
		2318420-1	A		SILICONE LR	PERIPHERAL SEAL.9LEN X 5.4W IDTH	RED BROWN	1	3
		2318424-1	A		PA66-GF30	REC CONN CVR.8POS.MCON 0.5.TWO ROW	BLACK	1	2
		2318423-1	A		PA66-GF30	8POS.MCON 0.5.REC HSG.SLD.COD A.TWO ROW	BLACK	1	1

2X6POS.MCON 0.5.REC HSG ASSY.SLD

TE-ASSY-NO. TE-ZSB.-NR.	ASSY REV ZSB. REV	TE-PART-NO. TE-TEILE-NR.	REV	CODING KODIERUNG	MATERIAL	DESCRIPTION BENNENUNG	COLOR FARBE	QTY. MENGE	ITEM NO. ITEM NR.
2318600-9	A	1-2300154-1	A	J	PA66-GF30	CPA	RED	1	6
		2318222-5	A		PA66-GF30	TPA REC HSG.12POS.MCON 0.5	PURPLE	1	5
		2318621-1	B		SILICONE HTV	FAMILY SEAL.MCON 0.5.2X6POS	BLUE	1	4
		2318620-1	A		SILICONE LR	PERIPHERAL SEAL.12.6LEN X 5.4W IDTH	RED BROWN	1	3
		2318624-1	A		PA66-GF30	REC CONN CVR.12POS.MCON 0.5.TWO ROW	BLACK	1	2
		2318623-9	A		PA66-GF30	12POS.MCON 0.5.REC HSG.SLD.COD J.TWO ROW	CURRY	1	1
2318600-8	A	1-2300154-1	A	H	PA66-GF30	CPA	RED	1	6
		2318222-5	A		PA66-GF30	TPA REC HSG.12POS.MCON 0.5	PURPLE	1	5
		2318621-1	B		SILICONE HTV	FAMILY SEAL.MCON 0.5.2X6POS	BLUE	1	4
		2318620-1	A		SILICONE LR	PERIPHERAL SEAL.12.6LEN X 5.4W IDTH	RED BROWN	1	3
		2318624-1	A		PA66-GF30	REC CONN CVR.12POS.MCON 0.5.TWO ROW	BLACK	1	2
		2318623-8	A		PA66-GF30	12POS.MCON 0.5.REC HSG.SLD.COD H.TWO ROW	BEIGE	1	1
2318600-7	A	1-2300154-1	A	G	PA66-GF30	CPA	RED	1	6
		2318222-5	A		PA66-GF30	TPA REC HSG.12POS.MCON 0.5	PURPLE	1	5
		2318621-1	B		SILICONE HTV	FAMILY SEAL.MCON 0.5.2X6POS	BLUE	1	4
		2318620-1	A		SILICONE LR	PERIPHERAL SEAL.12.6LEN X 5.4W IDTH	RED BROWN	1	3
		2318624-1	A		PA66-GF30	REC CONN CVR.12POS.MCON 0.5.TWO ROW	BLACK	1	2
		2318623-7	A		PA66-GF30	12POS.MCON 0.5.REC HSG.SLD.COD G.TWO ROW	LIGHT PINK	1	1
2318600-6	A	1-2300154-1	A	F	PA66-GF30	CPA	RED	1	6
		2318222-5	A		PA66-GF30	TPA REC HSG.12POS.MCON 0.5	PURPLE	1	5
		2318621-1	B		SIL