© 2022 TE Connectivity. All Rights Reserved.

| REVISIONS | | | | | |
|---|---|---|---|---|---|
| P | LTR | DESCRIPTION | DATE | DWN | APVD |
| | A | INITIAL RELEASE | 09JAN23 | M.X | F.P |
| | A1 | ECR-23-164983 | 01FEB23 | M.X | F.P |
| | A2 | ECR-23-170176 | 23MAR23 | M.X | F.P |

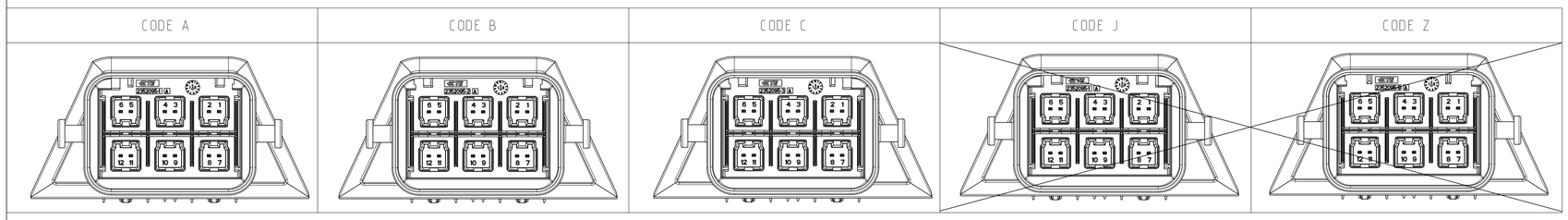


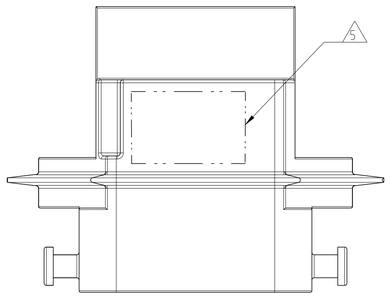


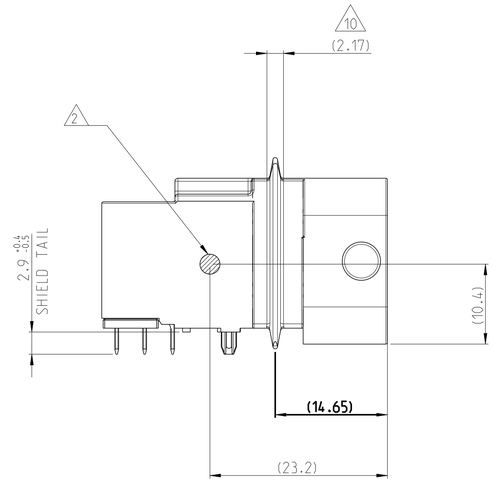


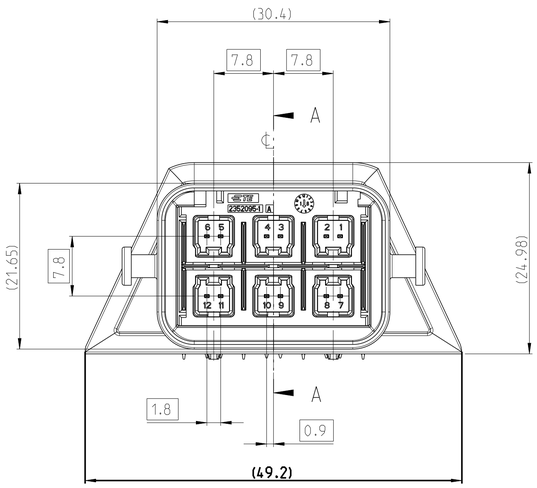


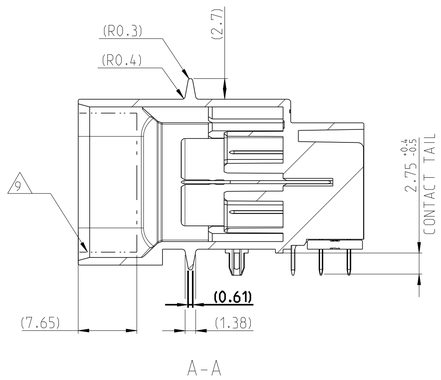


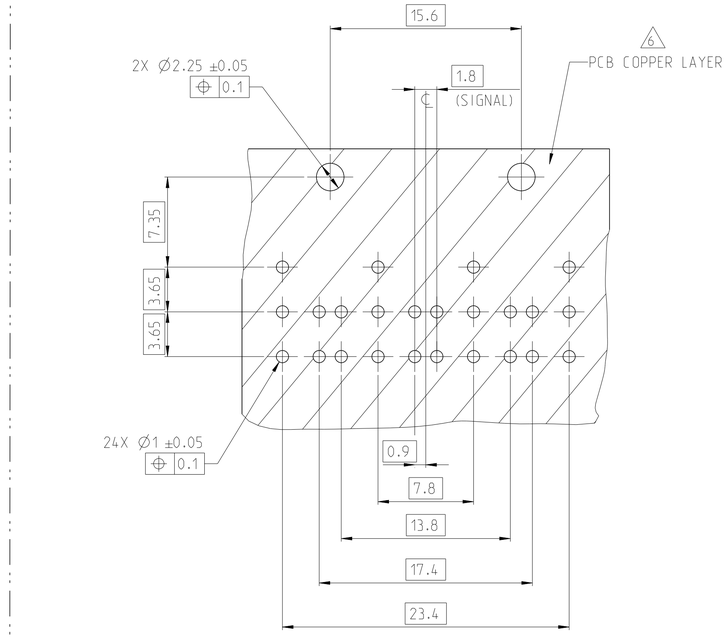


RECOMMENDED PCB-LAYOUT
THICKNESS 1.6mm

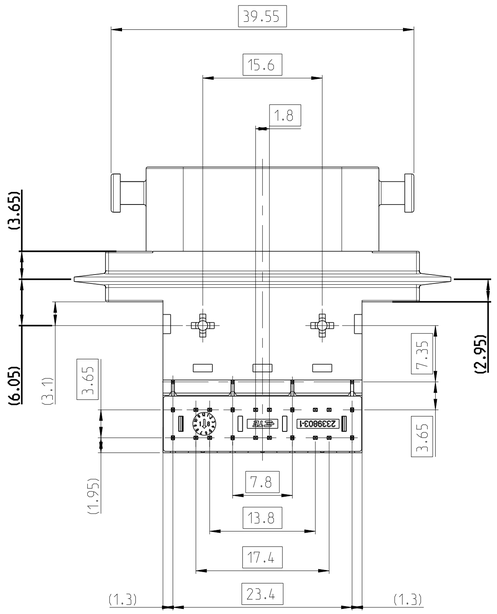


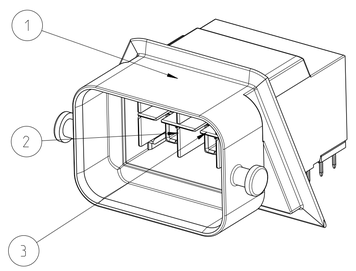


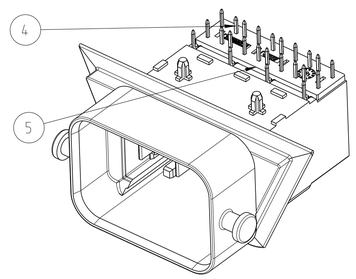


1 INTERFACE DESIGN ARE LEFT TO TE CONNECTITY

2 CENTER OF GRAVITY

3 ALL DIMENSIONS IN ( ) FOR INFORATION ONLY

4 SOLDERING PROCESS: LEAD FREE REFLOW SOLDERING IN REFERENCE TO JEDEC J-STD-020D

5 VACUM GRIP AREA FREE OF SCRATCH

6 PCB TOP LAYER MUST BE GND PLANE, EXCEPT THE NEED SIGNAL PATHES AND CUT OUT AREA

7 MATED WITH TE STP PLUG *-2351636-*

8 CODE A AS SHOWN

9 SEALING SURFACE

10 GLUE AREA

| TE ASSY No. | REV. | CODE | QTY. | DESCRIPTION | MATERIAL | WEIGHT [g] | COLOR/SURFACE | POS |
|---|---|---|---|---|---|---|---|---|
| 2351577-9 | A | Z | 1 | FOOT HOUSING | PA4T-GF30 | 15.55 | BLACK | 5 |
| | | | 12 | CONTACT | Cu ALLOY | | Ni/Sn | 4 |
| | | | 1 | HORIZONTL SHIELD | Cu ALLOY | | PRE-TIN | 3 |
| | | | 4 | VERTICAL SHIELD | STAINLESS STEEL | | Ni/Sn | 2 |
| | | | 1 | HOUSING | PA10T-GF30 | | WATER BLUE | 1 |
| 2351577-7 | A | J | 1 | FOOT HOUSING | PA4T-GF30 | 15.55 | BLACK | 5 |
| | | | 12 | CONTACT | Cu ALLOY | | Ni/Sn | 4 |
| | | | 1 | HORIZONTL SHIELD | Cu ALLOY | | PRE-TIN | 3 |
| | | | 4 | VERTICAL SHIELD | STAINLESS STEEL | | Ni/Sn | 2 |
| | | | 1 | HOUSING | PA10T-GF30 | | BEIGE | 1 |
| 2351577-3 | A | C | 1 | FOOT HOUSING | PA4T-GF30 | 15.55 | BLACK | 5 |
| | | | 12 | CONTACT | Cu ALLOY | | Ni/Sn | 4 |
| | | | 1 | HORIZONTL SHIELD | Cu ALLOY | | PRE-TIN | 3 |
| | | | 4 | VERTICAL SHIELD | STAINLESS STEEL | | Ni/Sn | 2 |
| | | | 1 | HOUSING | PA10T-GF30 | | BLUE | 1 |
| 2351577-2 | A | B | 1 | FOOT HOUSING | PA4T-GF30 | 15.55 | BLACK | 5 |
| | | | 12 | CONTACT | Cu ALLOY | | Ni/Sn | 4 |
| | | | 1 | HORIZONTL SHIELD | Cu ALLOY | | PRE-TIN | 3 |
| | | | 4 | VERTICAL SHIELD | STAINLESS STEEL | | Ni/Sn | 2 |
| | | | 1 | HOUSING | PA10T-GF30 | | WHITE | 1 |
| 2351577-1 | A | A | 1 | FOOT HOUSING | PA4T-GF30 | 15.55 | BLACK | 5 |
| | | | 12 | CONTACT | Cu ALLOY | | Ni/Sn | 4 |
| | | | 1 | HORIZONTL SHIELD | Cu ALLOY | | PRE-TIN | 3 |
| | | | 4 | VERTICAL SHIELD | STAINLESS STEEL | | Ni/Sn | 2 |
| | | | 1 | HOUSING | PA10T-GF30 | | BLACK | 1 |

THIS DRAWING IS A CONTROLLED DOCUMENT.

DIMENSIONS: mm

TOLERANCES UNLESS OTHERWISE SPECIFIED:
0 PLC ±0.4
1 PLC ±0.4
2 PLC ±0.3
3 PLC ±
4 PLC ±
ANGLES ±2°

MATERIAL: - see table

FINISH: - see table

DWN M.XU 23MAR2023
CHK D.ZHU 23MAR2023
APVD F.PAN 23MAR2023

PRODUCT SPEC: -

APPLICATION SPEC: -

WEIGHT: see table

TE Connectivity

NAME: MATEnet 90deg HEADER 2X3 PORTS SEALED

SIZE: A1 | CAGE CODE: - | DRAWING NO: C-2351577 | RESTRICTED TO: -

CUSTOMER DRAWING | SCALE 5:2 | SHEET 1 OF 1 | REV A2

4805 (3/13)