© 2019 TE Connectivity. All Rights Reserved.

ASSEMBLY PN: 7-2357848-7

REVISIONS					
P	LTR	DESCRIPTION	DATE	DWN	APVD
	A	INITIAL RELEASE	13OCT2020	A.X	I.Y
	A1	ECN-21-111565	02AUG2021	A.X	J.Z
	A2	ECR-21-124342	16DEC2021	A.X	J.Z
	A3	ECN-22-171252	25AUG2022	A.X	J.Z

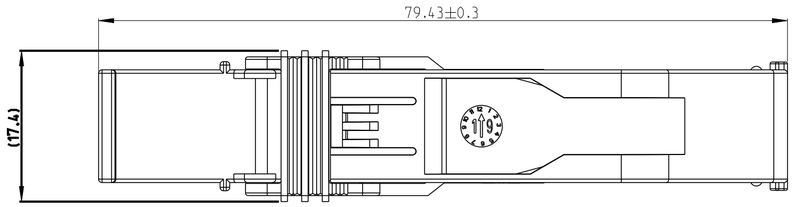

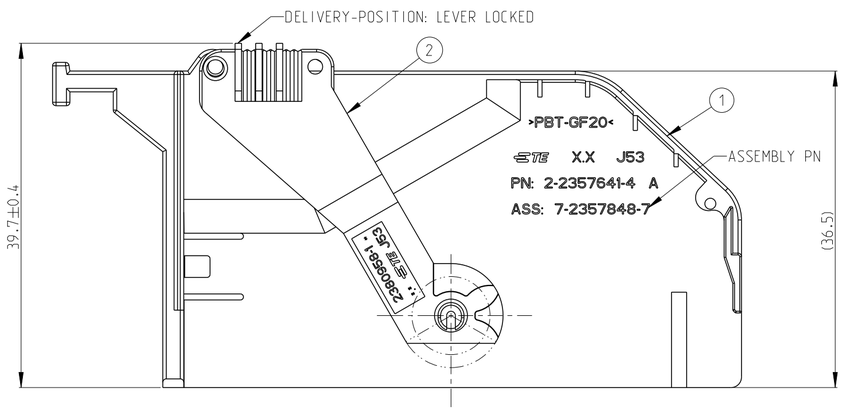

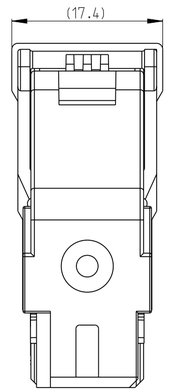

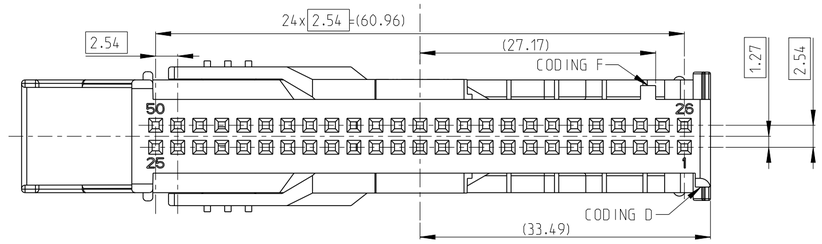

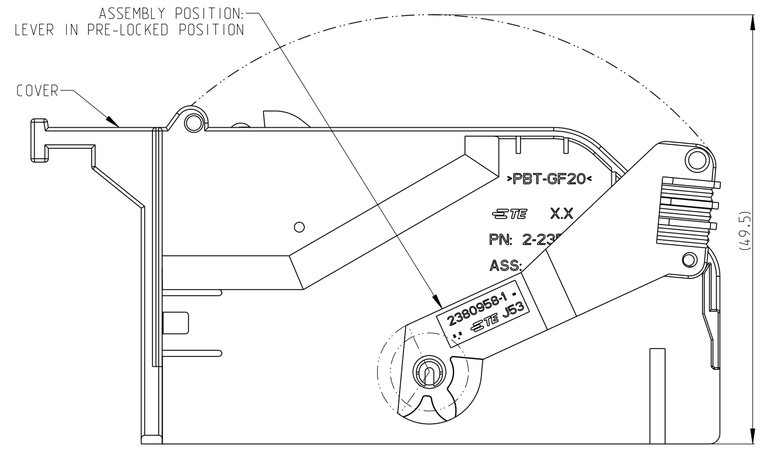

ASSEMBLY POSITION

CODE: D&F
ASSEMBLY PN: 7-2357848-7

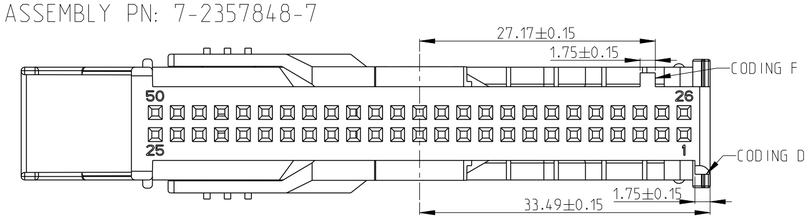

CODE: C&G
ASSEMBLY PN: 2357848-1

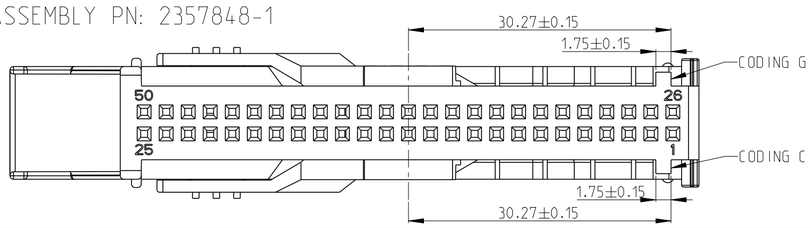

CODE: A&5
ASSEMBLY PN: 2357848-2

A3

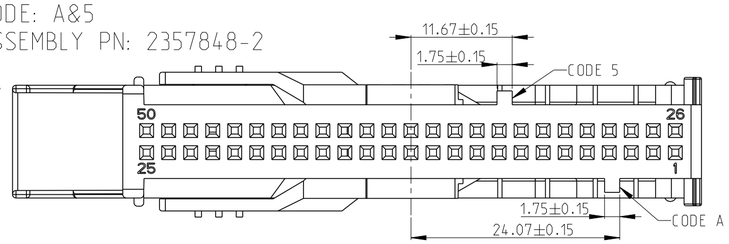

NOTES

1. MATERIAL SEE THE TABLE
2. PACKAGING: BULK PACKAGE
3. SUITABLE SOCKET: 3-2357846-2
4. ABOUT 7-2357848-7, SUITABLE PIN HEADER: 0-1719635-3

A3

QTY.			MATERIAL	COLOR	DESCRIPTION	ITEM NO
1	1	1	PBT-GF20	PURE ORANGE SIMILAR RAL 2004	LEVER	2
1			PBT-GF20	YELLOW	COVER	1
	1		PBT-GF20	BLACK SIMILAR RAL 9005	COVER	1
		1	PBT-GF20	GREY SIMILAR RAL 7036	COVER	1
A&5	C&G	D&F	CODING			
2357848-2	2357848-1	7-2357848-7	ASSEMBLY PN			

THIS DRAWING IS A CONTROLLED DOCUMENT.

DIMENSIONS: mm

TOLERANCES UNLESS OTHERWISE SPECIFIED:
0 PLC ±
1 PLC ±0.4
2 PLC ±0.3
3 PLC ±
4 PLC ±
ANGLES ±5°

MATERIAL –
FINISH –

DWN A.XIONG 13OCT2020
CHK E.JIANG 13OCT2020
APVD I.YIN 13OCT2020
PRODUCT SPEC 108-160111
APPLICATION SPEC 114-160065
WEIGHT –

TE Connectivity

NAME 50POS,MQS,COVER ASSEMBLY
–

SIZE	CAGE CODE	DRAWING NO	RESTRICTED TO
A2	00779	C-2357848	–

CUSTOMER DRAWING | SCALE 1:1 | SHEET 1 OF 1 | REV A3

1471-9 (3/13)