© 2023 TE Connectivity. All Rights Reserved.

REVISIONS ÄNDERUNGEN					
P	LTR	DESCRIPTION BESCHREIBUNG	DATE	DWN	APVD
	B	NEW DRAWING	19MAY2020	US	BK
	B1	ECR-21-003915	06APR2021	US	BK
	C	PCN-22-154905	10OCT2022	AK	DH

0-2358664-1
CLOSED CONDITION

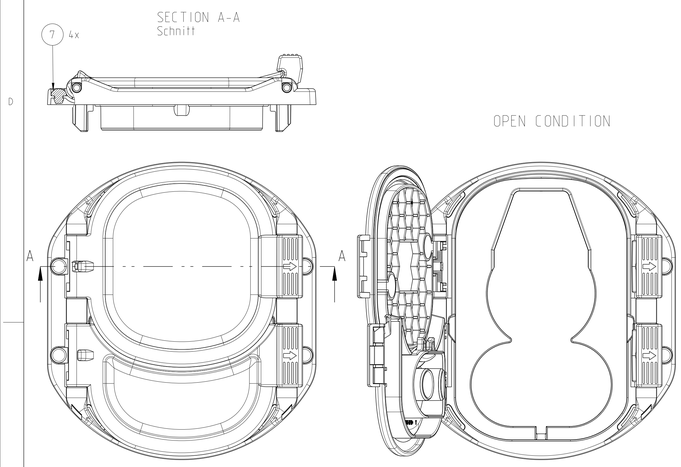

0-2358664-2
CLOSED CONDITION

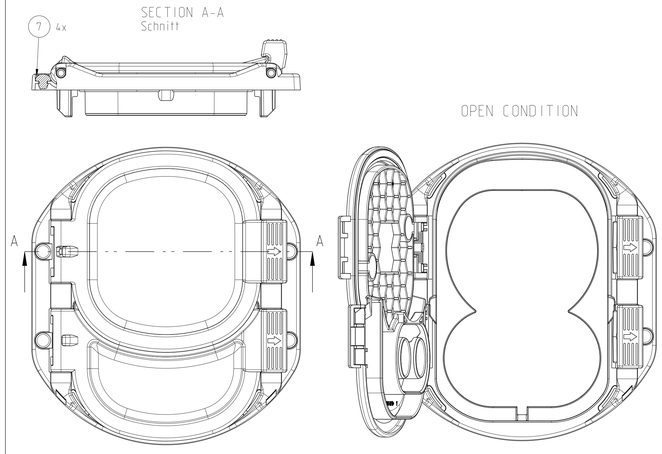

0-2358664-3
CLOSED CONDITION

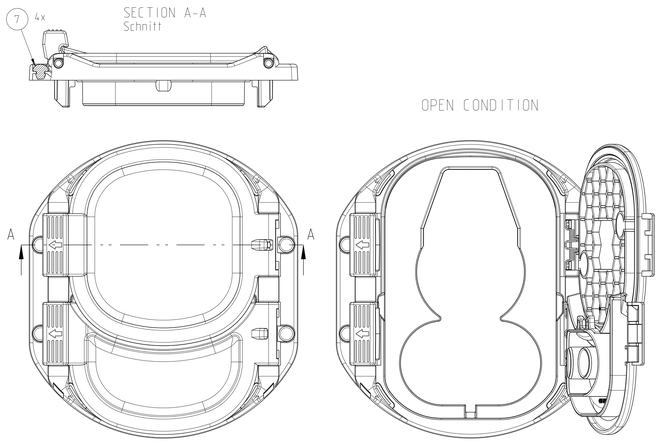

0-2358664-4
CLOSED CONDITION

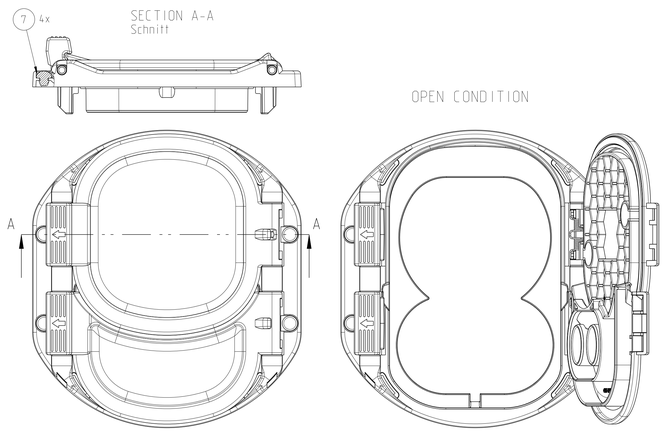

0-2358664-1
AS SHOWN
Wie gezeigt

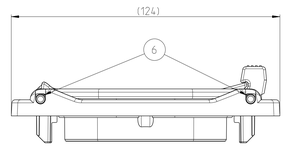

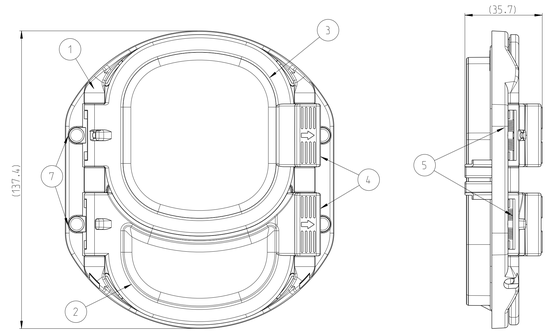

NOTES

1. FUNCTION OF BOTH FLAPS AND LEVERS HAS TO BE CHECKED BY OPENING AND CLOSING BY HAND
2. TRAY PACKAGING WITH PAPER CUSHION INSERT. EVERY PART IN SEPERATE PLASTIC BAG ACCORDING SPEC 107-18032
3. COMPATIBLE WITH INLET ASSY:
   CCS1: X-2366402-X
   CCS2: X-2377400-X

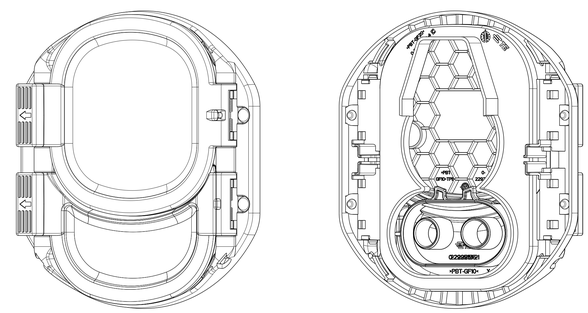

OPEN CONDITION
AS SHOWN
Offene Position
Wie gezeigt

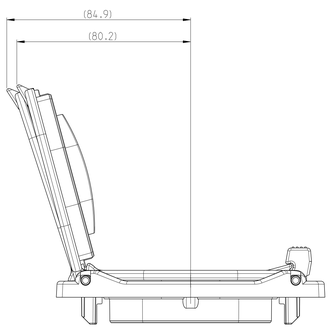

QTY REQD PER ASSY								PARTS LIST				
2	2	2	2	-	-	-	-	1-2292519-1	B	INDICATOR CAP, PRINTED	0.22	WHITE/ TRANSLUCENT	8
4	4	4	4	4	4	4	4	2292523-1	B	GROMMET, FLAP DAMPENER	0.19	BLACK	7
2	2	2	2	2	2	2	2	2292536-2	A	BOLT, FLAP AXIS, LONG	7.66	-	6
4	4	4	4	4	4	4	4	2292517-1	A	SPRING, TORSION	0.6	-	5
2	2	2	2	2	2	2	2	2292518-1	B	LEVER, FLAP, COMBO	3.71	BLACK	4
1	1	1	1	1	1	1	1	2292521-2	D	FLAP, TE, AC CHARGE INLET, SEALED	30.69	BLACK	3
-	-	1	-	-	-	1	-	1-2292515-2	D	DC FLAP, COMBO2, LEFT	23.37	BLACK	2
1	-	-	-	1	-	-	-	1-2292515-1	D	DC FLAP, COMBO2, RIGHT	23.37	BLACK	
-	-	-	1	-	-	-	1	2292515-2	D	DC FLAP, COMBO1, LEFT	22.81	BLACK	
-	1	-	-	-	1	-	-	2292515-1	D	DC FLAP, COMBO1, RIGHT	22.81	BLACK	
1	-	1	-	-	-	-	-	2358662-4	C	CARRIER, FLAP, CHARGE INLET, COMBO 2, LED	41.93	BLACK	1
-	1		1	-	-	-	-	2358662-3	C	CARRIER, FLAP, CHARGE INLET, COMBO 1, LED	46.42	BLACK	
-	-	-	-	1	-	1	-	2358662-2	C	CARRIER, FLAP, CHARGE INLET, COMBO 2	41.94	BLACK	
-	-	-	-	-	1	-	1	2358662-1	C	CARRIER, FLAP, CHARGE INLET, COMBO 1	46.23	BLACK	
0-...-8	0-...-7	0-...-6	0-...-5	0-...-4	0-...-3	0-...-2	0-...-1	PART TCPN	REV	DESCRIPTION	WEIGHT (g)	COLOUR	ITEM NO
C	C	C	C	C	C	C	C	REVISION OF EACH ASSY NO (WHEN BLANK, USE DWG REVISION)					
122	126	122	126	122	126	122	126	WEIGHT OF EACH ASSY NO (g)					

DIMENSION AND TOLERANCES ACCORDING TO:
Bemaßungen und Toleranzen gemäß

DIN 16742
TOLERANCE GROUP TG5
Toleranzgruppe TG5

DIN EN ISO 8015 (ISO), DIN EN ISO 291
DIN EN ISO 14405-1/-2/-3

DIESE ZEICHNUNG IST EIN KONTROLLIERTES DOKUMENT.
BEMASSUNGEN UND TOLERANZEN GEMAESS GPS (ISO STANDARDS).
THIS DRAWING IS A CONTROLLED DOCUMENT.
DIMENSIONING AND TOLERANCING PER GPS (ISO STANDARDS).

DIMENSIONS: MASSE/METEN (!!!!!)
TOLERANCES UNLESS OTHERWISE SPECIFIED: ALLGEMEINTOLERANZEN
2 PLC ±-
3 PLC ±-
4 PLC ±-
ANGULAR ±-
FINISH/OBERFLÄCHE/FARBE: SEE TABLE / siehe Tabelle
MATERIAL: SEE TABLE / siehe Tabelle
WEIGHT/GEWICHT: SEE TABLE
CUSTOMER DRAWING

DWN: SHWETA KUDRAGI 26JUN2019
CHK: R. KOSCH 26JUN2019
APVD: J. KOESTER 26JUN2019
PRODUCT SPEC PRODUKTSPEC.
APPLICATION SPEC VERWENDUNGSSPEC.

TE Connectivity

NAME: FLAP, ASSY, INLET COMBO
SIZE: A0 | CAGE CODE: 00779 | DRAWING NO: C 2358664 | RESTRICTED TO NOR PGR: -
SCALE: MASSSTAB 1:1 | SHEET BLATT 1 OF 2 | REV: C

/KUNDENZEICHNUNG

4806 (3/13)

© 2023 TE Connectivity. ALL Rights Reserved.

REVISIONS					
ÄNDERUNGEN					
P	LTR	DESCRIPTION BESCHREIBUNG	DATE	DWN	APVD
	–	SEE SHEET 1	–	–	–

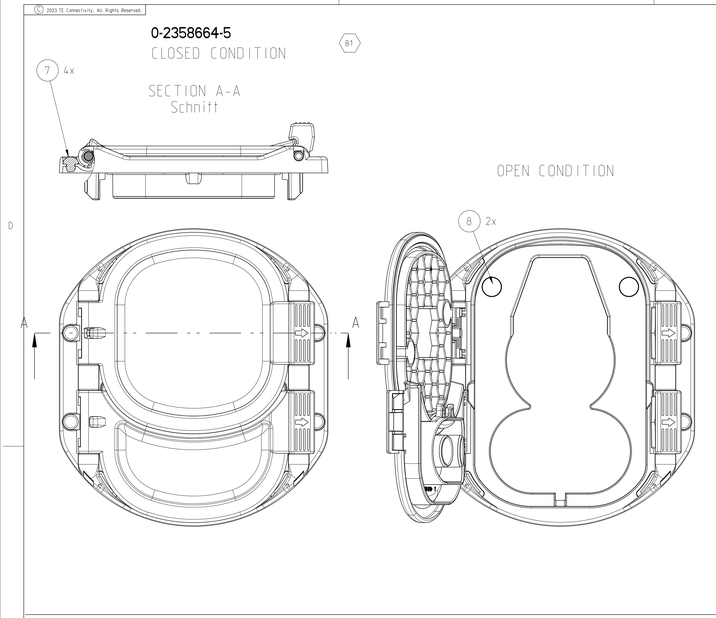

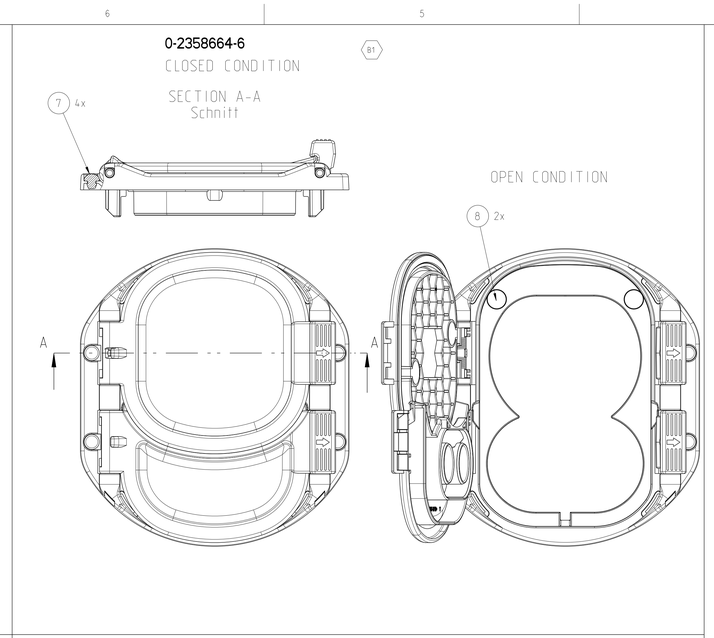

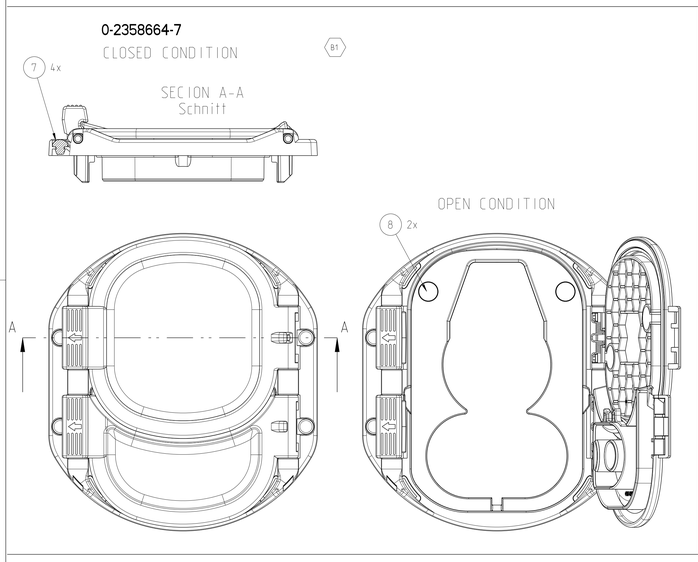

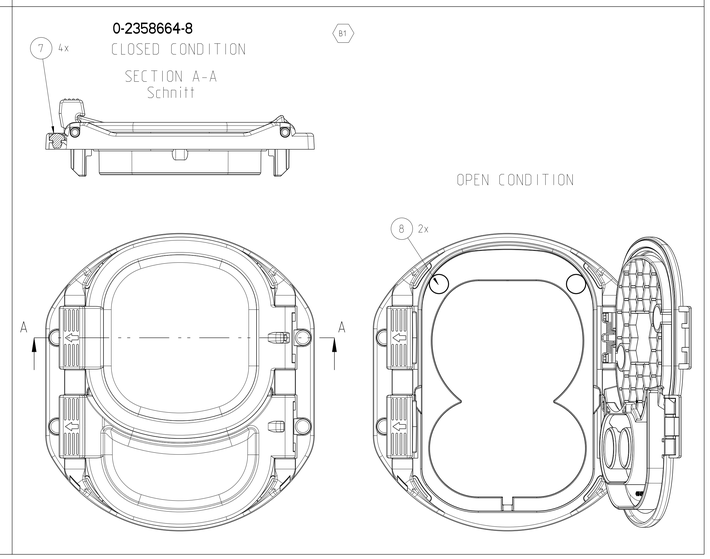

THIS DRAWING IS A CONTROLLED DOCUMENT.	DWN SHWETA KULKARNI 23JUN2019 CHK B. KOSCH 26JUN2019 APVD J. KOESTER 26JUN2019	TE Connectivity	
DIMENSIONS: MASSE/METER mm	TOLERANCES, UNLESS OTHERWISE SPECIFIED: ALLGEMEINTOLERANZEN 0 PLC ±- 1 PLC ±- 2 PLC ±- 3 PLC ±- 4 PLC ±- ANGLES/WINKEL ±-	PRODUCT SPEC PRODUKTSPEZ. – APPLICATION SPEC VERWENDUNGSSPEZ. –	NAME FLAP, ASSY, INLET COMBO – –
MATERIAL SEE TABLE siehe Tabelle	FINISH/OBERFLÄCHE/FARBE SEE TABLE siehe Tabelle	WEIGHT GEWICHT SEE TABLE	SIZE A0 / CAGE CODE 00779 / DRAWING NO ZEICHNUNG-NR. C-2358664 / RESTRICTED TO NUR FÜER –
		CUSTOMER DRAWING	/KUNDENZEICHNUNG / SCALE MASSSTAB 5:1 / SHEET BLATT 2 OF VON 2 / REV C

4806 (3/13)