© 2020 TE Connectivity. All Rights Reserved.

REVISIONS					
P	LTR	DESCRIPTION	DATE	DWN	APVD
	A	NEW DRAWING	20AUG2020	US	BK
	B	PCN-22-154951	09OCT2022	AK	DH
	B1	PCN-24-197695	19JAN2024	AJ	KPB

REQUIREMENT FOR MOUNTING PLATE

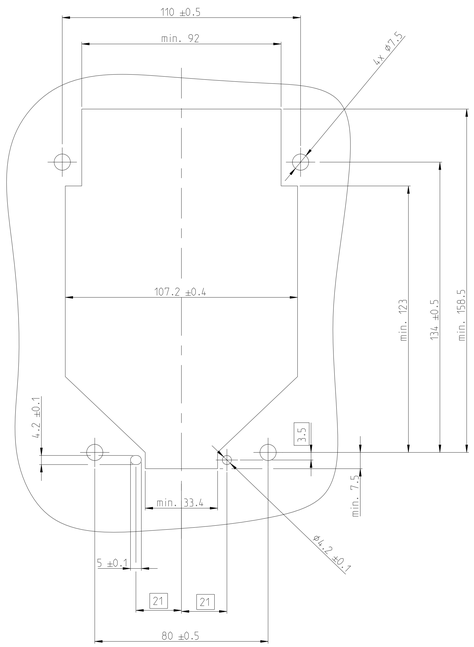

SECTION A-A

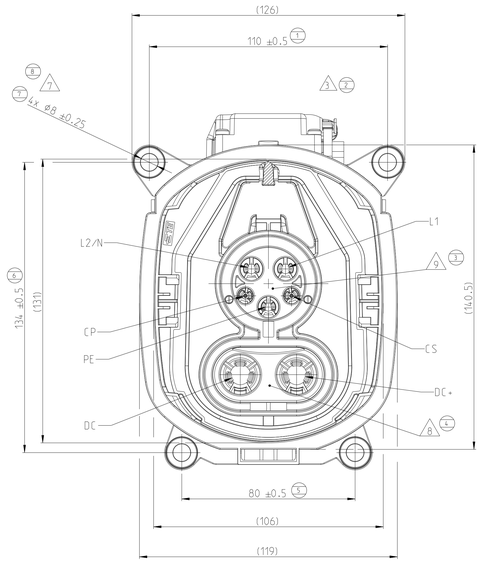

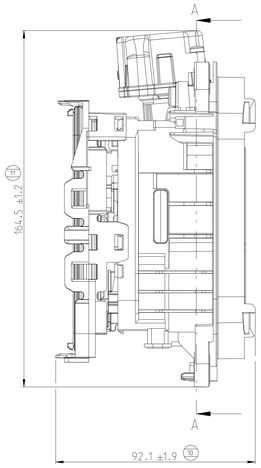

DETAIL G

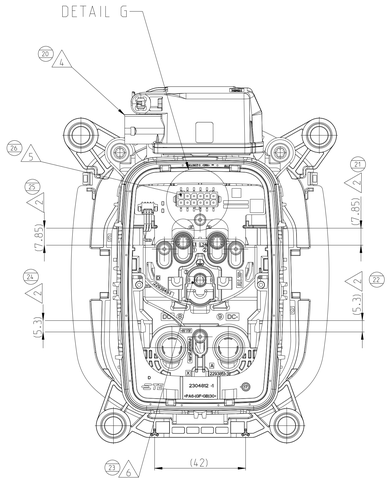

NOTES
Bemerkungen

59 1 PACKED INTERLAYERED IN PLASTIC BAG (ANTISTATIC) IN CORRUGATED SHIPPING BOX
Lagenverpackung in Plastikbeutel (antistatisch) im Versandkarton

2 DELIVERY CONDITION: SEC. LOCKS IN PRELOCK POSITION
Lieferzustand: Sec. Locks in Vorraststellung

3 DELIVERY CONDITION ACTUATOR: ACTUATOR IN BASE POSITION
Lieferzustand des Aktuators: Aktuator in Grundstellung

4 ROOM FOR CONNECTOR PN 1-967640-1 MATING WITH TE SPEC. 114-18063-124.
Raum für Stecker PN 1-967640-1, passend zur TE Spezifikation 114-18063-124

5 MAKE SURE THAT NO MECHANICAL FORCES ARE APPLIED ON THE HEADER OF PCBA
Sicherstellen, dass keine mechanischen Kräfte auf den Header der PCBA wirken

6 PE CONTACT CLAMP MAY BE DISCOLORED (BLACK/BROWN). TYPICAL FOR AG PLATING AND HAS NO IMPACT ON FUNCTION
Farbe der PE Kontaktklammer kann anlaufen (schwarz/braun). Typisch für Silberoberflächen und hat keinen Einfluss auf die Funktion

7 APPLICABLE SCREWS FOR MOUNTING, HEAD DIAMETER MIN. 10.5mm.
TORQUE 6Nm±0.9Nm FOR M6 SCREWS
Passende Schrauben zur Befestigung, Kopfdurchmesser min. 10.5mm.
Drehmoment 6Nm±0.9Nm für M6 Schrauben

8 CHARGE INLET SIMILAR TO IEC62196-3.CCS 1, SHEET 3-IIIa
Ladeeinheit ähnlich zu IEC62196-3.CCS 1, SHEET 3-IIIa

9 CHARGE INLET SIMILAR TO IEC62196-2.TYPE 1, SHEET 2-I
Ladeeinheit ähnlich zu IEC62196-2.TYPE 1, SHEET 2-I

10 ADAPTIVE CABLES SEE APPLICATION SPECIFICATION 114-xxxxx
Adapterkabel siehe Applications Spezifikation 114-xxxxx

11 SPECIFIED IN PRODUCT SPECIFICATION 108-xxxxx
Spezifiziert nach Produkt Spezifikation 108-xxxxx

12 COMPATIBLE PCB CONNECTOR: PN 1-794617-2 WITH TERMINAL PN 0-794606-1
Kompatibler PCB Stecker: PN 1-794617-2 mit TERMINAL PN 0-794606-1

13 FUNCTIONAL AND ELECTRICAL REQUIREMENTS OF ACTUATOR
SEE SPECIFICATION 108-94519
Funktionale und elektrische Anforderungen des Aktuators
siehe Spezifikation 108-94519

AS SHOWN PN 2366402-1
Wie gezeigt
SCALE 1:2

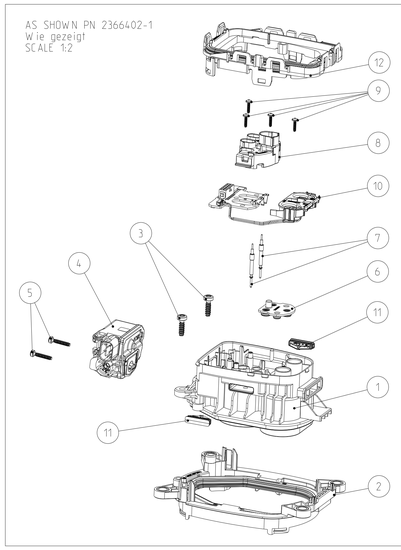

AS SHOWN PN 2366402-3
Wie gezeigt
SCALE 1:2 B1

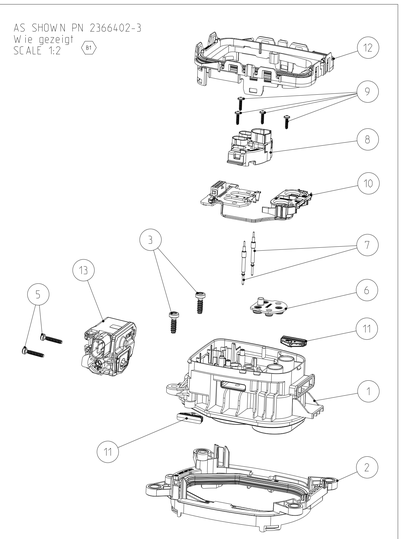

DETAIL G
Einzelheit
SCALE 2:1
Maßstab

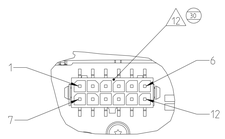

SCALE 1:2
Maßstab

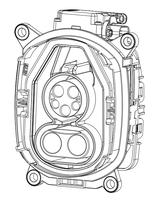

SCALE 1:2
Maßstab

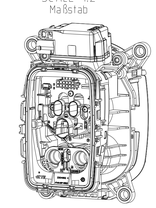

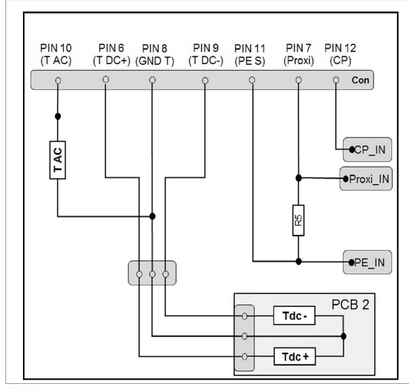

3-2293469-1 & 4-2293469-1
4 WIRE VARIANT:
4 Anschluss Variante

PIN 3	PIN 2	SENSE RESISTANCE	FUNCTION
–	+	11.000 kOhm ± 2%	LOCKED
		2.194 kOhm ± 2%	DRIVE
		1.540 kOhm ± 2%	FAULT
		0.989 kOhm ± 2%	UNLOCKED

PIN 1	PIN 4	FUNCTION Funktion
–	+	UNLOCKING Entriegeln
+	–	LOCKING Verriegeln

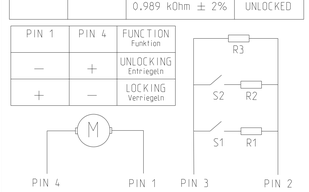

PINNING
PCB

PIN NO.	COMBO 1
6	T DC+
7	Proxi
8	GND. Temp
9	T DC-
10	T AC
11	PE S
12	CP

TEST ITEM	RESISTANCE MEASUREMENT TEST PINS		VALUE T_{amb} = 25° ±5° C
TAC	10	8	1097Ω ±20Ω
TDC+	6	8	1097Ω ±20Ω
TDC-	9	8	1097Ω ±20Ω
R5	11	7	2700Ω ±80Ω
Proxi	Proxi	7	0Ω +1Ω
CP	CP	12	0Ω +1Ω

B1	1	-	4-2293469-1	K	-	ACTUATOR, CHARGE INLET TYPE1 MS 4W. ASSY. 24V	-	13
	1	1	2322239-1	D	-	ADAPTER,CABLE EXIT, DC SIDE, COMBO, ASSY	BLACK Schwarz	12
	2	2	2294755-2	A	-	SEALING PLUG	BLACK Schwarz	11
	1	1	2312180-1	G	-	COMBO .TPA,PCB LIGHT.ASSY	-	10
	4	4	2120525-1	B	-	SCREW. SHELL & STRAIN RELIEF	ZnNi	9
	1	1	2293849-1	D	-	SEC LOCK. INLET 1	RED Rot	8
	2	2	2293273-1	B	-	PIN CONTACT. DIA1.5 CP/CS	Ag	7
	1	1	2293283-1	A	-	GROMMET, CONTACT KIT, SEAL TYPE1	GREEN Gr-Gr	6
	2	2	2236640-1	A	-	SCREW.35X18.SLOTTED.ROUND HEAD	ZnNi	5
	-	1	3-2293469-1	K	-	ACTUATOR, CHARGE INLET TYPE1 MS 4W. ASSY. 12V	-	4
	2	2	2293347-1	A	-	SCREW. 5x16. SELF THREAD CUTTING	BLACK Schwarz	3
	1	1	0-2358661-1	B	B	BRACKET.INLET COMBO.ASSY.SEALED		2
	1	1	1-2293540-1	E	-	CHARGE INLET HOUSING COMBO TYPE 1	BLACK Schwarz	1
	2366402-3	2366402-1	PART TCPN	REV	3D-PDF REV	DESCRIPTION	COLOUR	ITEM NO
	B	B	REVISION OF EACH ASSY NO (WHEN BLANK, USE DWG REVISION)					
B1	388.79	388.89	WEIGHT OF EACH ASSY NO (g)					
	INLET MSG ASSY W/O LED,CCS1 24V ACTUATOR	INLET MSG ASSY W/O LED,CCS1 12V ACTUATOR	PARTS LIST					

THIS DRAWING IS A CONTROLLED DOCUMENT.

DIMENSIONS: mm

MATERIAL

FINISH

TOLERANCES UNLESS OTHERWISE SPECIFIED: 0 PLC ± 1 PLC ± 2 PLC ± 3 PLC ± 4 PLC ± ANGLES ±

DIMENSION AND TOLERANCES ACCORDING TO: Bemaßungen und Toleranzen gem.B5.

DIN 9242
DIN EN ISO 8015 (B) - DIN EN ISO 291
DIN EN ISO 14405-1/-2/-3

DWN	U. Siegel	20AUG2020
CHK	R. Kosch	22AUG2020
APVD	J. Koester	22AUG2020

PRODUCT SPEC 108-94803 B1
APPLICATION SPEC 114-94674 B1
WEIGHT

TE Connectivity

NAME COMBO 1,CHARGE INLET ASSY. WITHOUT LED

SIZE	CAGE CODE	DRAWING NO	RESTRICTED TO
A0	00779	C-2366402	

CUSTOMER DRAWING | SCALE 5:1 | SHEET 1 OF 1 | REV B1

4806 (3/13)