© 2023 TE Connectivity. All Rights Reserved.

-1 AS SHOWN WITHOUT DUST CAP ASSEMBLED

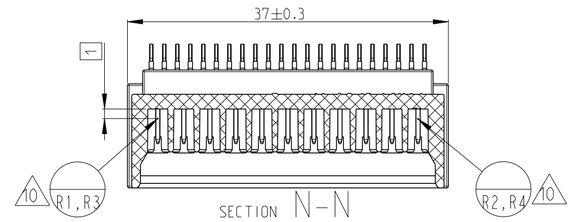

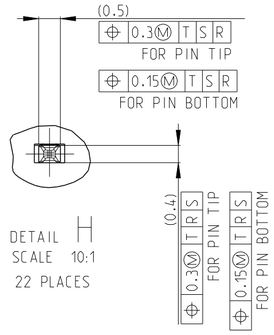

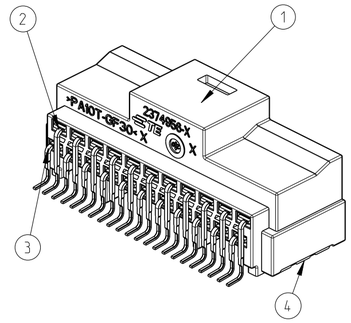

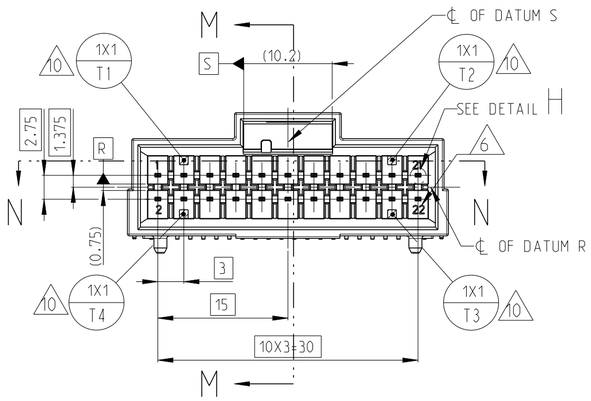

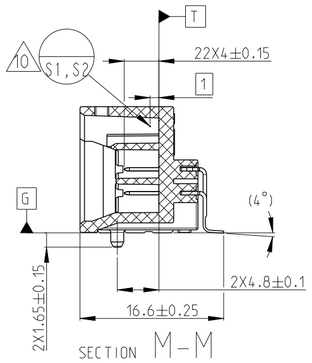

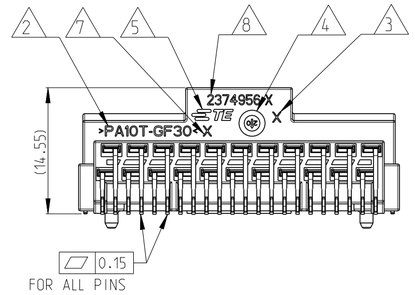

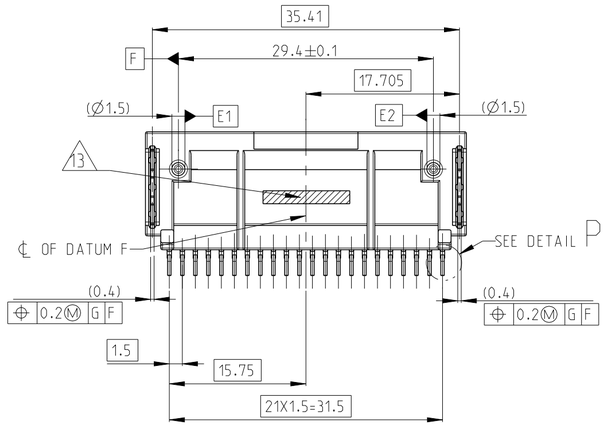

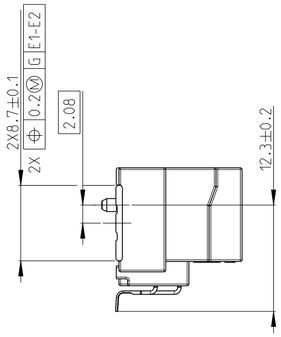

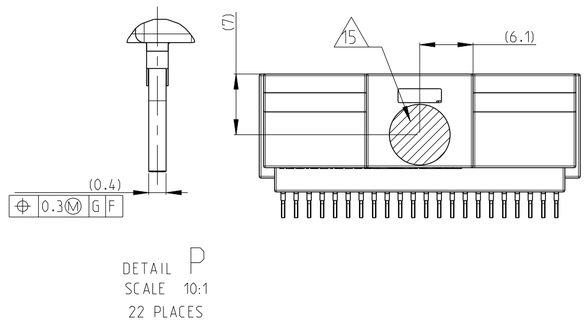

1 PLASTIC MATERIAL:
FOR HOUSING PA10T-GF30. FLAMMABILITY UL94 V-0.FOR DUST CAP PBT-GF30.FLAMMABILITY UL94 HB
PICO MQS TAB MATERIAL: COPPER ALLOY.PLATING SPEC:TIN OVER NICKEL
SOLDERING BRACKET MATERIAL: COPPER ALLOY.PLATING SPEC:TIN OVER NICKEL

2 MATERIAL MARK.

3 PRODUCT VERSION.

4 DATE CODE.

5 TE LOGO.

6 PIN CAVITY NO.

7 TOOL CAVITY NO.

8 PRODUCT PART NO.

9 UNDEFINED INTERFACE DIMENSION ACCORDING TO THE LATEST VERSION OF WKS.016.518.A

10 FOR INTERFACE SIDE:
DATUM T DEFINED BY T1.T2.T3.T4 POINTS.
DATUM R MEASURE BY POINTS R1.R2.R3.R4.AS THE CENTER LINE OF DIM. 0.75
REFERENCE POINTS R3.R4 ARE ON OPPOSITE SIDE OF R1.R2
DATUM S MEASURE BY POINTS S1.S2.AS THE CENTER LINE OF DIM. 10.2
S1.S2 ARE ON THE OPPOSITE SIDE OF EACH OTHER

11 CLEANLINESS REQUIREMENT: NO LOOSE METAL PARTICLES LARGER THAN 500um ALLOWED
MEASUREMENT SYSTEMS AND ANALYSIS METHOD REFER TO ISO 16232 LATEST VERSION

12 PRESS OUT FORCE FOR PICO MQS PIN >15N WITH SPEED RATE SPEED 50±10mm/min

13 PRODUCTION INFORMATION LASER MARK :XX.XXXX.X.
FIRST 2 BYTES STAND FOR PRODUCTION YEAR:18/19/20...
SECOND 4 BYTES STAND FOR DATE.FIRST XX MEANS MONTHSNEXT XX MEANS DAYS.
LAST 1 BYTE STAND FOR DIFFERENT SHIFT. B MEANS DAY SHIFT. C MEANS NIGHT SHIFT

14 HAZARDOUS SUBSTANCE RESTRICTION OF THE PRODUCT AND PROCESSING SHALL COMPLY WITH TE SPEC TEC-138-707

15 THIS AREA IS FOR SMT FEEDING SUCKING. NO PART LINE/BURRS/EJECTOR MARK. DIAMETER 7MM

16 CAP ALLOWED TO BE SHIPPED SEPARATELY. ONLY CAN BE ENGAGED AFTER SMT PROCESS

17 FOR LEAD FREE SOLDER PASTE APPLICATION. THE WINDOW SIZE OF STENCIL SHALL BE CORRESPONDING TO PAD SIZE. THICKNESS OF STENCIL MUST BE 0.2MM MIN

CODING AS SHOWN:

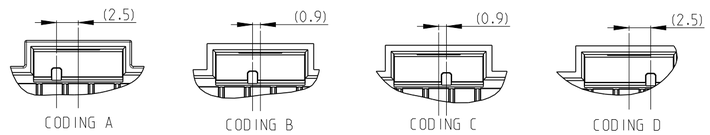

-1 AS SHOWN WITH DUST CAP ASSEMBLED

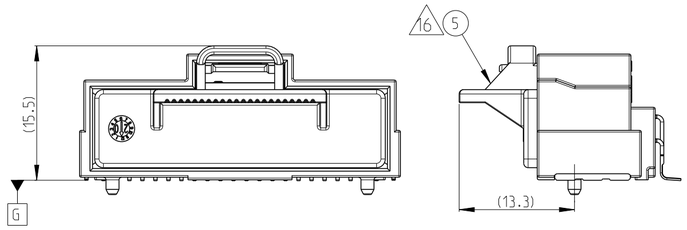

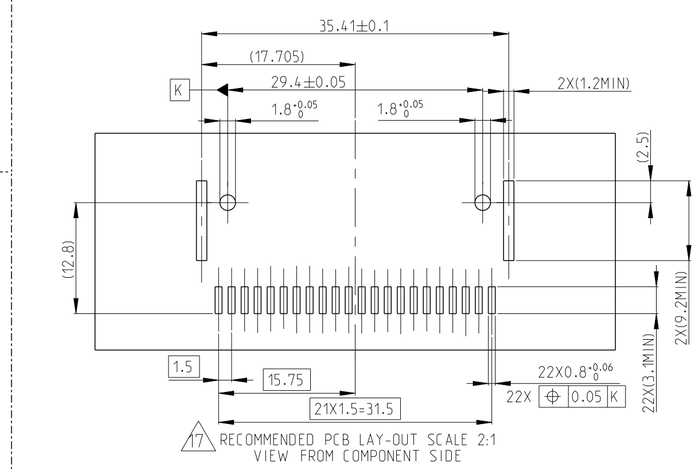

REVISIONS

P	LTR	DESCRIPTION	DATE	DWN	APVD
	A	RELEASE	16JUN23	D.W	E.J

PART LIST

TE P/N	CODING	QTY	DESCRIPTION	MATERIAL	COLOR/FINISH	ITEM NO
2374956-2	B	1	DUST CAP 16	PBT-GF30	BLACK	5
		2	SOLDERING BRACKET	COPPER ALLOY	Sn OVER Ni	4
		11	PICO MQS PIN SHORT	COPPER ALLOY	Sn OVER Ni	3
		11	PICO MQS PIN LONG	COPPER ALLOY	Sn OVER Ni	2
		1	22 POS HOUSING CODING B	P10T-GF30	BLACK	1
2374956-1	A	1	DUST CAP 16	PBT-GF30	BLACK	5
		2	SOLDERING BRACKET	COPPER ALLOY	Sn OVER Ni	4
		11	PICO MQS PIN SHORT	COPPER ALLOY	Sn OVER Ni	3
		11	PICO MQS PIN LONG	COPPER ALLOY	Sn OVER Ni	2
		1	22 POS HOUSING CODING A	PA10T-GF30	BLACK	1

THIS DRAWING IS A CONTROLLED DOCUMENT.

DIMENSIONS: mm

TOLERANCES UNLESS OTHERWISE SPECIFIED: ±0.1
0 PLC ±
1 PLC ±0.1
2 PLC ±0.01
3 PLC ±0.001
4 PLC ±0.0001
ANGLES ±1

MATERIAL: SEE TABLE
FINISH: SEE TABLE

DWN D.WANG 14JUN2023
CHK C.ZHOU 16JUN2023
APVD E.JIANG 16JUN2023
PRODUCT SPEC –
APPLICATION SPEC –
WEIGHT –
CUSTOMER DRAWING

TE Connectivity

NAME PICO MQS HEADER
22 POS. SMT TYPE 90DEG

SIZE A2 | CAGE CODE 00779 | DRAWING NO C-2374956 | RESTRICTED TO –
SCALE 2:1 | SHEET 1 OF 1 | REV A

1471-9 (3/13)