© 2020 TE Connectivity. All Rights Reserved.

REVISIONS					
P	LTR	DESCRIPTION	DATE	DWN	APVD
	A	New Drwaing	20AUG2020	US	BK
	B	PCN-23-170168	23MAR2023	AK	JK
	B1	PCN-24-197698	19JAN2024	AJ	KPB

REQUIREMENT FOR MOUNTING PLATE

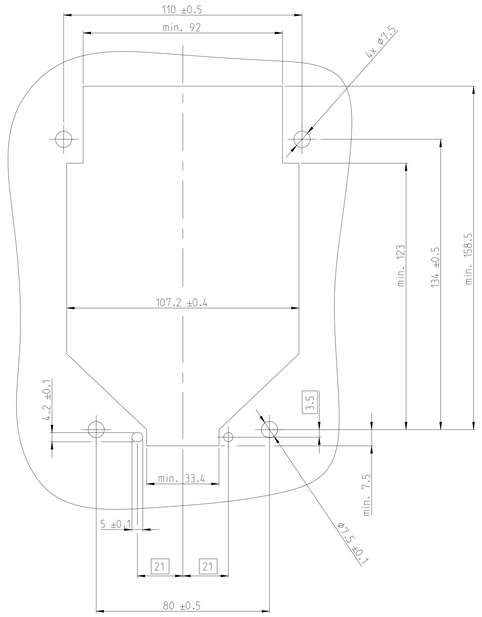

SECTION A-A

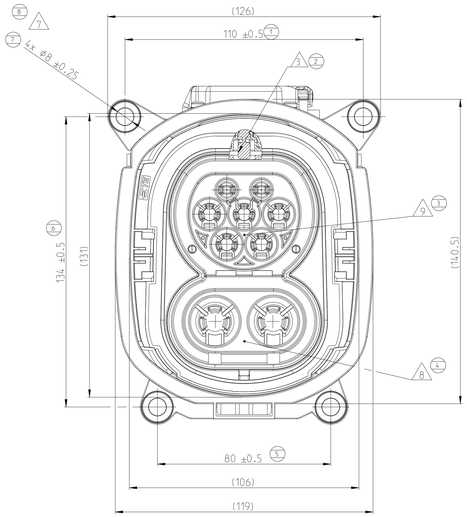

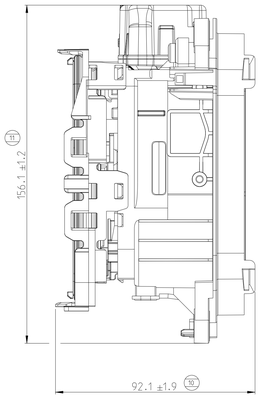

DETAIL G

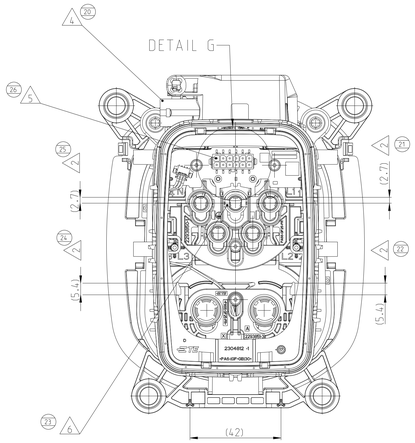

NOTES
Bemerkungen

1. PACKED INTERLAYERED IN PLASTIC BAG (ANTISTATIC) IN CORRUGATED SHIPPING BOX
   Lagenverpackung in Plastikbeutel (antistatisch) im Versandkarton
2. DELIVERY CONDITION: SEC. LOCKS IN PRELOCK POSITION
   Lieferzustand: Sec. Locks in Vorraststellung
3. DELIVERY CONDITION ACTUATOR: ACTUATOR IN BASE POSITION
   Lieferzustand des Aktuators: Aktuator in Grundstellung
4. ROOM FOR CONNECTOR PN 1-967640-1 MATING WITH TE SPEC. 114-18063-124.
   Raum für Stecker PN 1-967640-1, passend zur TE Spezifikation 114-18063-124
5. MAKE SURE THAT NO MECHANICAL FORCES ARE APPLIED ON THE HEADER OF PCBA
   Sicherstellen, dass keine mechanischen Kräfte auf den Header der PCBA wirken
6. PE CONTACT CLAMP MAY BE DISCOLORED (BLACK/BROWN). TYPICAL FOR AG PLATING AND HAS NO IMPACT ON FUNCTION
   Farbe der PE Kontaktklammer kann anlaufen (schwarz/braun). Typisch für Silberoberflächen und hat keinen Einfluss auf die Funktion
7. APPLICABLE SCREWS FOR MOUNTING, HEAD DIAMETER MIN. 10.5mm.
   TORQUE 6Nm±0.9Nm FOR M6 SCREWS
   Passende Schrauben zur Befestigung, Kopfdurchmesser min. 10.5mm.
   Drehmoment 6Nm±0.9Nm für M6 Schrauben
8. (B1) CHARGE INLET SIMILAR TO IEC62196-3.CCS 2, SHEET 3-IVa
   Ladeeinheit ähnlich zu IEC62196-3.CCS 2, SHEET 3-IVa
9. (B1) CHARGE INLET SIMILAR TO IEC62196-2.TYPE 2, SHEET 2-IIf
   Ladeeinheit ähnlich zu IEC62196-2.TYPE 2, SHEET 2-IIf
10. ADAPTIVE CABLES SEE APPLICATION SPECIFICATION 114-xxxxx
    Adapterkabel siehe Applications Spezifikation 114-xxxxx
11. SPECIFIED IN PRODUCT SPECIFICATION 108-xxxxx
    Spezifiziert nach Produkt Spezifikation 108-xxxxx
12. COMPATIBLE PCB CONNECTOR: PN 1-794617-2 WITH TERMINAL PN 0-794606-1
    Kompatibler PCB Stecker: PN 1-794617-2 mit TERMINAL PN 0-794606-1
13. FUNCTIONAL AND ELECTRICAL REQUIREMENTS OF ACTUATOR
    SEE SPECIFICATION 108-94519
    Funktionale und elektrische Anforderungen des Aktuators
    siehe Spezifikation 108-94519

DETAIL G
Einzelheit
SCALE 2:1
Maßstab

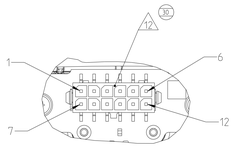

AS SHOWN
PN 2377400-1
Wie gezeigt
SCALE 1:2

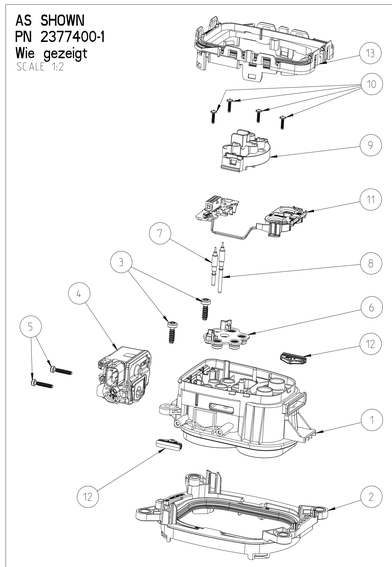

AS SHOWN (B1)
PN 2377400-3
Wie gezeigt
SCALE 1:2

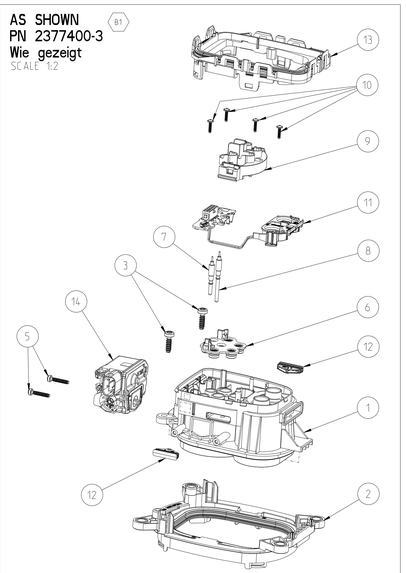

SCALE 1:2
Maßstab

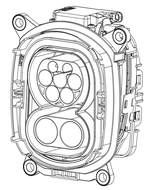

SCALE 1:2
Maßstab

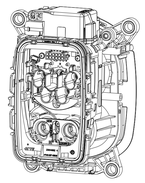

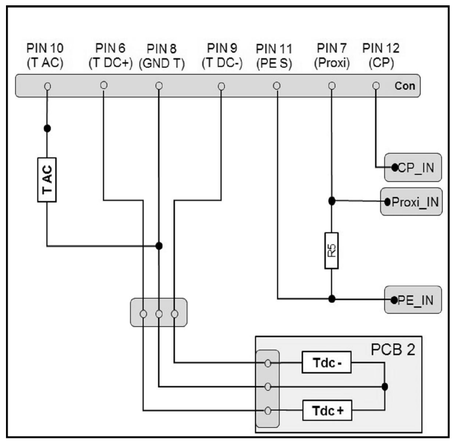

(B1) 3-2293469-2 & 4-2293469-2
4 WIRE VARIANT:
4 Anschluss Variante

PIN 3	PIN 2	SENSE RESISTANCE	FUNCTION
–	+	11.000 kOhm ± 2%	LOCKED
		2.194 kOhm ± 2%	DRIVE
		1.540 kOhm ± 2%	FAULT
		0.989 kOhm ± 2%	UNLOCKED

PIN 1	PIN 4	FUNCTION Funktion
–	+	UNLOCKING Entriegeln
+	–	LOCKING Verriegeln

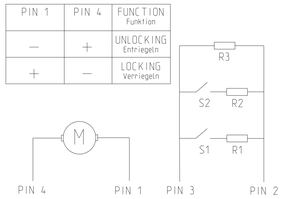

PINNING
PCB

PIN NO.	COMBO 2
6	T DC+
7	Proxi
8	GND. Temp
9	T DC-
10	T AC
11	PE S
12	CP

TEST ITEM	RESISTANCE MEASUREMENT TEST PINS		VALUE $^{@}T_{amb}$: 25° ±5°C
TAC	10	8	1097Ω ±20Ω
TDC+	6	8	1097Ω ±20Ω
TDC-	9	8	1097Ω ±20Ω
R5	11	7	4700Ω ±140Ω
Proxi	Proxi	7	0Ω +1Ω
CP	CP	12	0Ω +1Ω

(B1)

(B1) 1	-	4-2293469-2	K	-	ACTUATOR, CHARGE INLET TYPE2 MS 4W, ASSY, 24V	-	14
1	1	2322239-1	D	-	ADAPTER,CABLE EXIT, DC SIDE, COMBO, ASSY	BLACK Schwarz	13
2	2	2294755-2	A	-	SEALING PLUG	BLACK Schwarz	12
1	1	2312180-2	G	-	COMBO ,TPA,PCB LIGHT,ASSY		11
4	4	2120525-1	B	-	SCREW, SHELL & STRAIN RELIEF	ZnNi	10
1	1	2293850-1	D	-	SEC LOCK, INLET 2	RED Rot	9
1	1	2293275-1	A	-	PIN DIA 3.0,RIGID,SIGNAL PP TYP2	Ag	8
1	1	2293274-1	A	-	PIN DIA 3.0,RIGID,SIGNAL CP TYP2	Ag	7
1	1	2293284-3	A	-	GROMMET, CONTACT KIT, SEAL TYP2	BLUE Blau	6
2	2	2236640-1	A	-	SCREW,35X18,SLOTTED,ROUND HEAD	ZnNi	5
-	1	3-2293469-2	K	-	ACTUATOR, CHARGE INLET TYPE2 MS 4W, ASSY, 12V	-	4
2	2	2293347-1	A	-	SCREW, 5x16, SELF THREAD CUTTING	BLACK Schwarz	3
1	1	0-2358661-2	B	B	BRACKET,INLET COMBO,ASSY,SEALED		2
1	1	5-2293541-1	D	-	CHARGE INLET HOUSING COMBO TYPE 2	BLACK Schwarz	1
2377400-3	2377400-1	PART TCPN	REV	3D-PDF REV	DESCRIPTION	COLOUR	ITEM NO.
B	B	REVISION OF EACH ASSY NO (WHEN BLANK, USE DWG REVISION)					
(B1) 397.75	397.85	WEIGHT OF EACH ASSY NO (g)					
INLET HSG ASSY, CCS2 2kV ACTUATOR	INLET HSG ASSY, CCS2 12V ACTUATOR	PARTS LIST					

THIS DRAWING IS A CONTROLLED DOCUMENT.

DIMENSIONS: mm

TOLERANCES UNLESS OTHERWISE SPECIFIED:
0 PLC ±
1 PLC ±
2 PLC ±
3 PLC ±
4 PLC ±
ANGLES ±

MATERIAL

FINISH

DIMENSION AND TOLERANCES ACCORDING TO:
Bemaßungen und Toleranzen gem ß:
DIN 16742
DIN EN ISO 8015 (ID) - DIN EN ISO 291
DIN EN ISO 14405-1/-2/-3

DWN	U. Siegel	20AUG2020
CHK	B. Koech	22AUG2020
APVD	J. Koester	22AUG2020

PRODUCT SPEC 108-94804 (B1)
APPLICATION SPEC 114-94675 (B1)
WEIGHT -
CUSTOMER DRAWING

TE Connectivity

NAME COMBO 2,CHARGE INLET ASSY, WITHOUT LED

SIZE	CAGE CODE	DRAWING NO	RESTRICTED TO
A0	00779	C=2377400	-

SCALE 5:1 | SHEET 1 OF 1 | REV B1

4806 (3/13)