© 2021 TE Connectivity. All Rights Reserved.

REVISIONS					
P	LTR	DESCRIPTION	DATE	DWN	APVD
	G1	REVISED PER ECN-24-251848	12FEB2024	BKW	WM
	G2	REVISED PER ECN-24-252074	14FEB2024	BKW	WM
	G3	REVISED PER ECN-24-274980	10JUL2024	BKW	WM
	G4	REVISED PER ECN-24-275001	11JUL2024	BKW	WM

1. ALL DIMENSIONS SHOWN ARE REFERENCE UNLESS STATED OTHERWISE.
2. SELECTIVE TIN PLATING APPLIED TO ALL SURFACES IN AREA SHOWN.
3. DESIGNED TO BE INSERTED DIRECTLY INTO A PCB WITH AN INTERFERENCE FIT BETWEEN THE TERMINALS SOLDER LEGS AND THE RECOMMENDED PCB SLOT LAYOUT.
4. PROPER TERMINAL SPACING CAN VARY DUE TO MANY FACTORS. TO VERIFY PROPER SPACING FOR YOUR APPLICATION PLEASE CONTACT TE PRODUCT ENGINEERING FOR A COMPLETE ANALYSIS.
5. PART IS LUBRICATED, AND LUBRICANT MAY BE PRESENT ON ENTIRE PART SURFACE. AVOID CONTACT WITH TERMINAL CONTACT ZONE DURING HANDLING TO AVOID REMOVING LUBRICANT FROM PART IN THIS AREA.

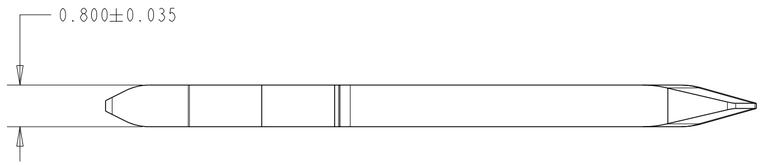

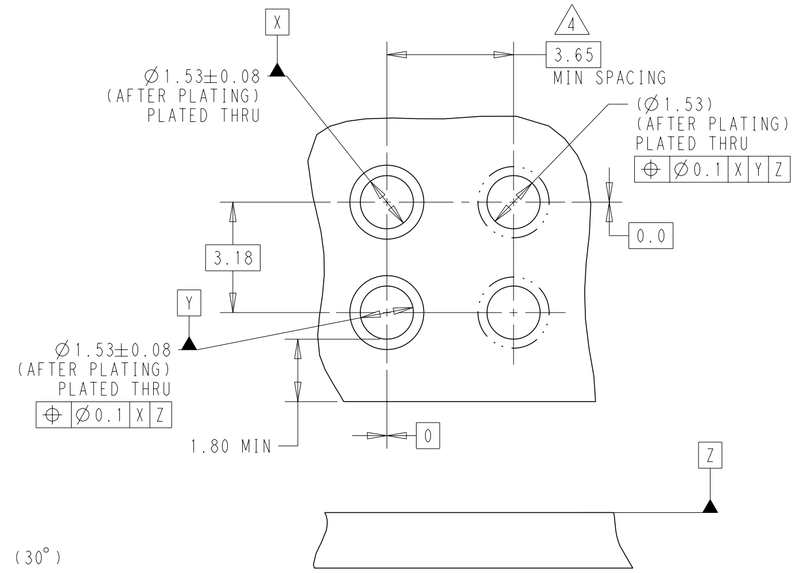

RECOMMENDED PCB LAYOUT

SCALE 8:1

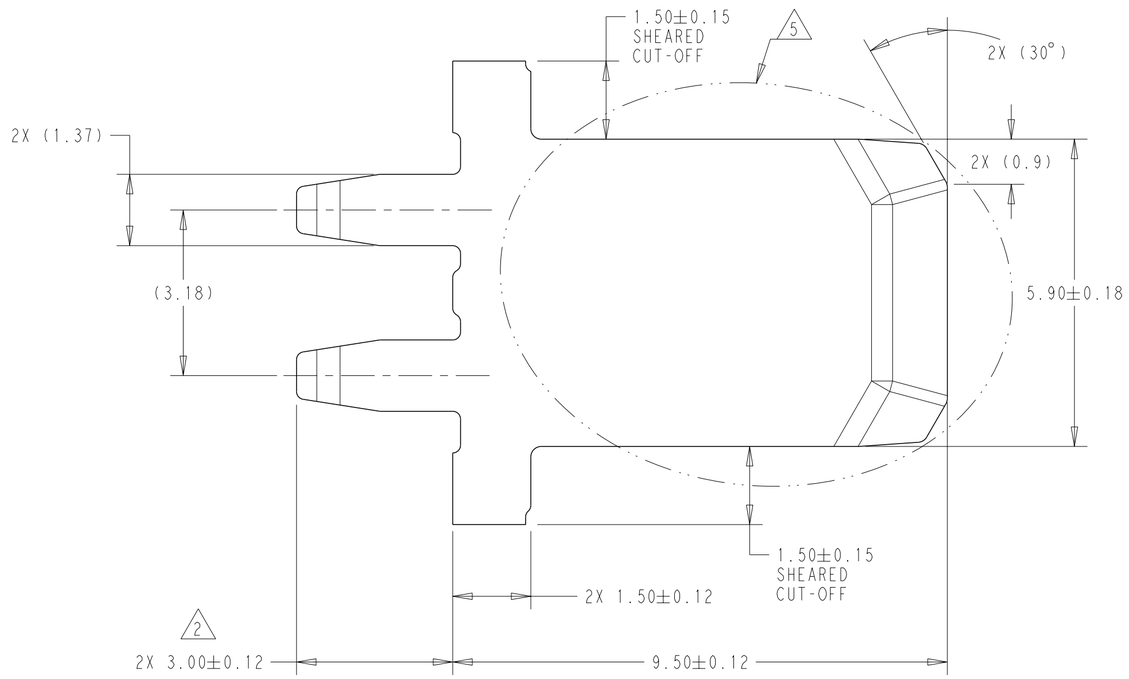

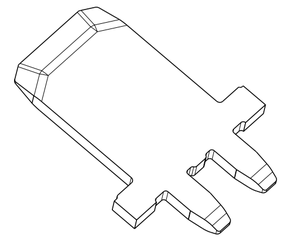

2388373-4 (LOOSE PIECED)
SHOWN ABOVE
SCALE 5:1

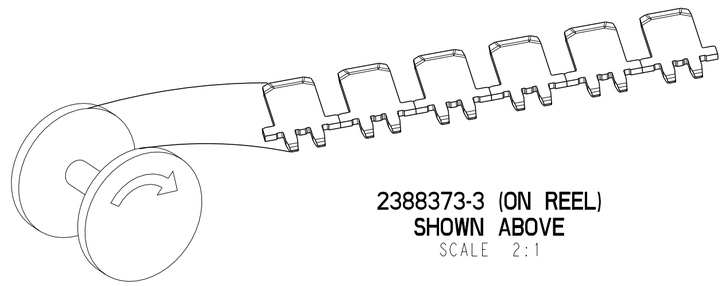

2388373-3 (ON REEL)
SHOWN ABOVE
SCALE 2:1

CONFIGURATION	PLATING	MATERIAL	PART NUMBER
LOOSE PIECED	NICKEL W/ SELECTIVE Sn	COPPER ALLOY	2388373-4
ON REEL	NICKEL W/ SELECTIVE Sn	COPPER ALLOY	2388373-3

THIS DRAWING IS A CONTROLLED DOCUMENT.

DIMENSIONS: mm

TOLERANCES UNLESS OTHERWISE SPECIFIED:
0 PLC ±-
1 PLC ±
2 PLC ±
3 PLC ±
4 PLC ±
ANGLES ±

MATERIAL: SEE TABLE
FINISH: SEE TABLE

DWN B. WEAVER 08APR2021
CHK A. FORTIER 08APR2021
APVD W. MOYER 08APR2021
PRODUCT SPEC 108-160280
APPLICATION SPEC 114-160168
WEIGHT -

TE Connectivity

NAME TAB TERMINAL, PCB, BATTERY CONNECTOR
-

SIZE	CAGE CODE	DRAWING NO	RESTRICTED TO
A2	00779	C-2388373	-

CUSTOMER DRAWING | SCALE 12:1 | SHEET 1 OF 1 | REV G4

printed on 11 Jul 2024 08:48 (Eastern Standard Time) from US075751