© 2020 TE Connectivity. All Rights Reserved.

REVISIONS					
P	LTR	DESCRIPTION	DATE	DWN	APVD
	A	RELEASED PER ECN-24-253569	27FEB2024	BP	JM

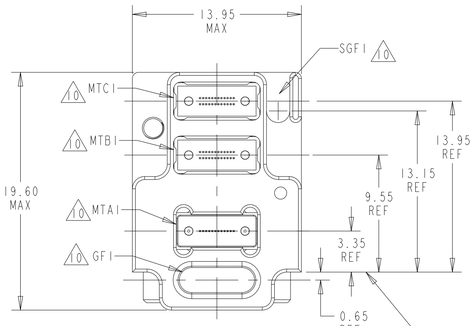

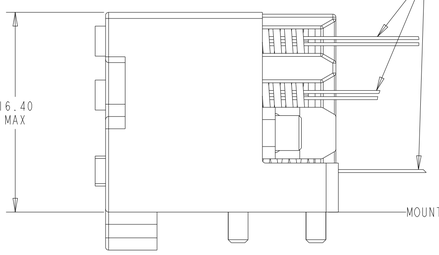

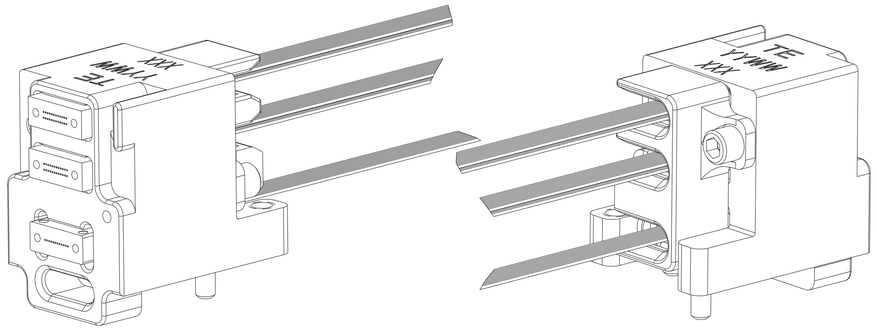

ASSEMBLED VIEW
(DUST COVER REMOVED
FOR CLARITY)

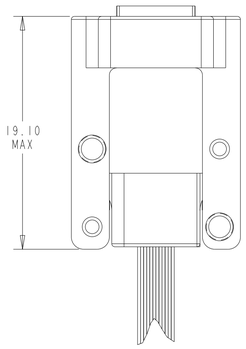

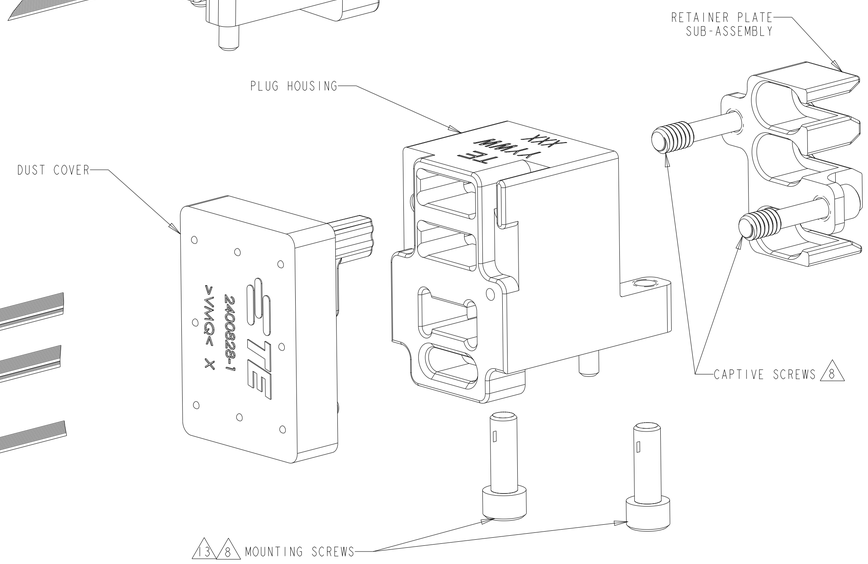

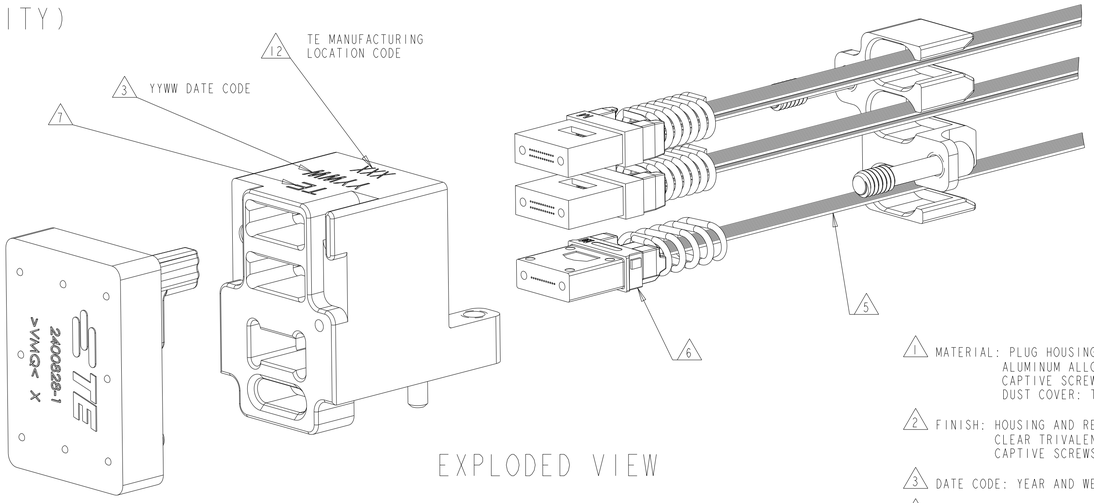

EXPLODED VIEW

PLUG (MODULE)
CONNECTOR KIT
2388442-1 4

SEE SHEET 2 OF 2 FOR PLUG-IN MODULE CARD FOOTPRINT

1 MATERIAL: PLUG HOUSING AND RETAINER PLATE:
ALUMINUM ALLOY
CAPTIVE SCREWS AND MOUNTING SCREWS: STAINLESS STEEL
DUST COVER: THERMOPLASTIC ELASTOMER

2 FINISH: HOUSING AND RETAINER PLATE:
CLEAR TRIVALENT CHROMIUM PASSIVATION.
CAPTIVE SCREWS AND MOUNTING SCREWS: PASSIVATED.

3 DATE CODE: YEAR AND WEEK (YYWW).

4 PLUG (MODULE) CONNECTOR KIT, (UNASSEMBLED)
CONSISTS OF THE FOLLOWING ITEMS: PLUG HOUSING (QTY 1)
RETAINER PLATE SUB-ASSEMBLY (QTY 1)
#2-56 X 1/4 IN. MOUNTING SCREWS (QTY 2)
DUST COVER (QTY 1)

5 CUSTOM FIBER-OPTIC CABLE ASSEMBLIES,
(CAN BE ORDERED SEPARATELY)

6 MT FERRULE KIT, (UNASSEMBLED)
CONTAINS: MT FERRULE, MINI-BOOT, FERRULE COVER, SPACER AND SPRING
(CAN BE ORDERED SEPARATELY)

7 TE CONNECTIVITY PRODUCT IDENTIFIER.

8 RECOMMENDED TORQUE: 0.45 N-m [4 in-lb]

9 AREA REQUIRED FOR CONNECTOR PLACEMENT.

10 PLUG-IN MODULE FIBER INTERFACE ENUMERATION PER VITA 66.5.

11 DATUM [A] REFERENCE PER ANSI/VITA 46.0, APPENDIX C

12 TE MANUFACTURING LOCATION CODE.

13 #2-56 x 1/4 IN. SCREWS WITH A PRE-APPLIED SELF-LOCKING PATCH
ARE INCLUDED FOR PC-BOARD MOUNTING.

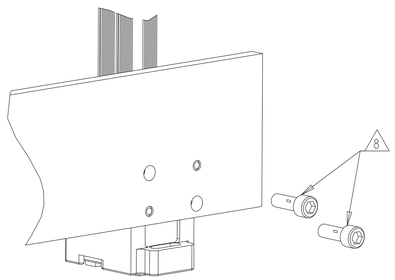

SCALE 2:1

PLUG-IN MODULE CARD MOUNTING DETAIL

2375154-2	2375154-1	2388442-1
24 FIBER	12 FIBER	KIT PART NUMBER
6 MT FERRULE KITS		

THIS DRAWING IS A CONTROLLED DOCUMENT.

DIMENSIONS: mm

TOLERANCES UNLESS OTHERWISE SPECIFIED:
0 PLC ±-
1 PLC ±-
2 PLC ±0.13
3 PLC ±0.013
4 PLC ±-
ANGLES ±1

MATERIAL 1
FINISH 2

DWN 15MARCH2021 D. FABIAN
CHK -
APVD -
PRODUCT SPEC 108-163028
APPLICATION SPEC 114-163023
WEIGHT -

TE Connectivity

NAME CONNECTOR KIT, PLUG, (MODULE)
3 CAVITY, CABLED,
VITA 66.5 STYLE D

SIZE	CAGE CODE	DRAWING NO	RESTRICTED TO
A1	00779	C-2388442	-

CUSTOMER DRAWING | SCALE 4:1 | SHEET 1 OF 2 | REV A

4805 (3/13)

© 2020 TE Connectivity. All Rights Reserved.

REVISIONS					
P	LTR	DESCRIPTION	DATE	DWN	APVD
	-	SEE SHEET 1	-	-	-

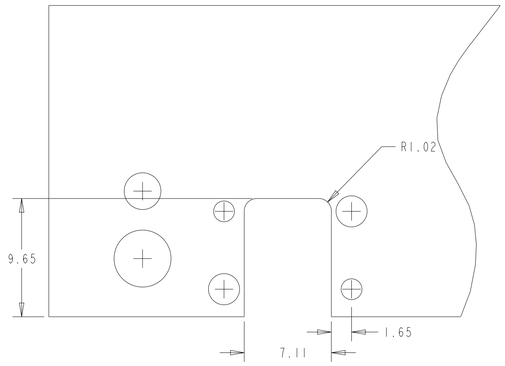

OPTIONAL CUTOUT

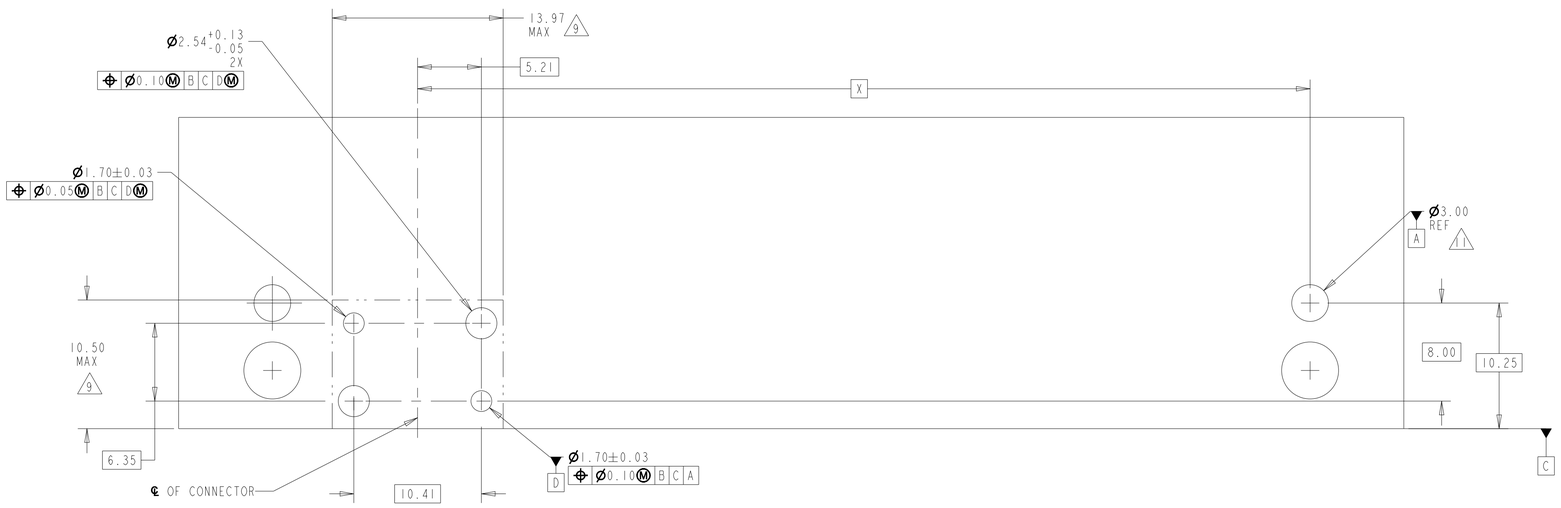

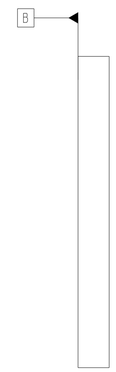

RECOMMENDED PLUG-IN MODULE CARD FOOTPRINT

	MATING BACKPLANE APERTURE WIDTH					
	FULL-WIDTH: VITA 67.3-C APERTURE		HALF-WIDTH: VITA 67.3-D APERTURE		1-1/2-WIDTH: VITA 67.3-E APERTURE	
	DIMENSION "X" (PROPOSED)		DIMENSION "X" (PROPOSED)		DIMENSION "X" (PROPOSED)	
TRANSCEIVER LOCATION	mm	in	mm	in	mm	in
P1B	-	-	44.47	1.751	44.47	1.751
P2A	58.73	2.312	58.73	2.312	58.73	2.312
P2B	72.99	2.874	72.99	2.874	72.99	2.874
P3A	98.01	3.859	101.60	4.000	-	-
P3B	112.41	4.426	115.72	4.556	-	-
P4A	131.88	5.192	130.40	5.134	-	-
P4B	146.28	5.759	144.52	5.690	-	-
P5A	160.68	6.326	159.20	6.268	-	-
P5B	175.08	6.893	173.32	6.824	-	-
P6A	189.83	7.474	188.00	7.402	-	-
P6B	204.23	8.041	202.12	7.957	-	-

THIS DRAWING IS A CONTROLLED DOCUMENT.

DIMENSIONS: mm

TOLERANCES UNLESS OTHERWISE SPECIFIED:
0 PLC ±-
1 PLC ±-
2 PLC ±0.13
3 PLC ±0.013
4 PLC ±-
ANGLES ±1

MATERIAL - -

FINISH - -

DWN D. FABIAN 15MARCH2021
CHK -
APVD -
PRODUCT SPEC -
APPLICATION SPEC -
WEIGHT -

TE Connectivity

NAME CONNECTOR KIT, PLUG, (MODULE) 3 CAVITY, CABLED, VITA 66.5 STYLE D

SIZE A1 | CAGE CODE 00779 | DRAWING NO C-2388442 | RESTRICTED TO -

CUSTOMER DRAWING | SCALE 4:1 | SHEET 2 OF 2 | REV A

4805 (3/13)