© 2021 TE Connectivity. All Rights Reserved.

REVISIONS					
P	LTR	DESCRIPTION	DATE	DWN	APVD
	A	NEW DRAWING	22JUL2021	SN	GL
	A1	NOTE 5 ADDED	17NOV2021	YP	GL
	A2	REVISED PER PCN-23-178661	15JUN2023	MK	GL

LOCKING UNIT POSITION UPPER CABLE OUTLET POSITION 1

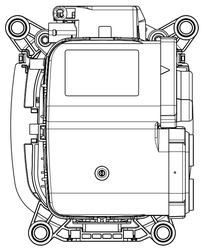

LOCKING UNIT POSITION UPPER CABLE OUTLET POSITION 2

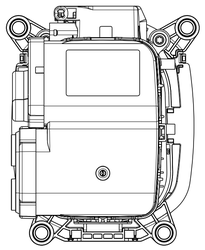

FLAPS OPEN LEFT

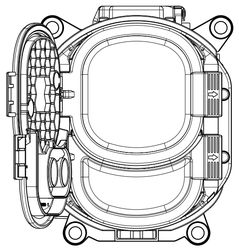

FLAPS OPEN RIGHT

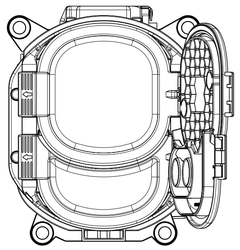

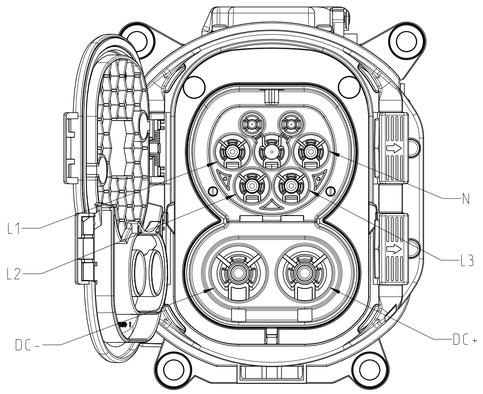

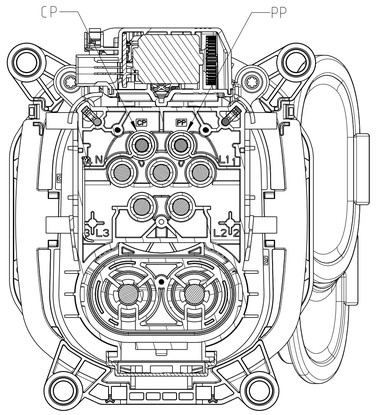

0- -3 AS SHOWN
wie dargestellt

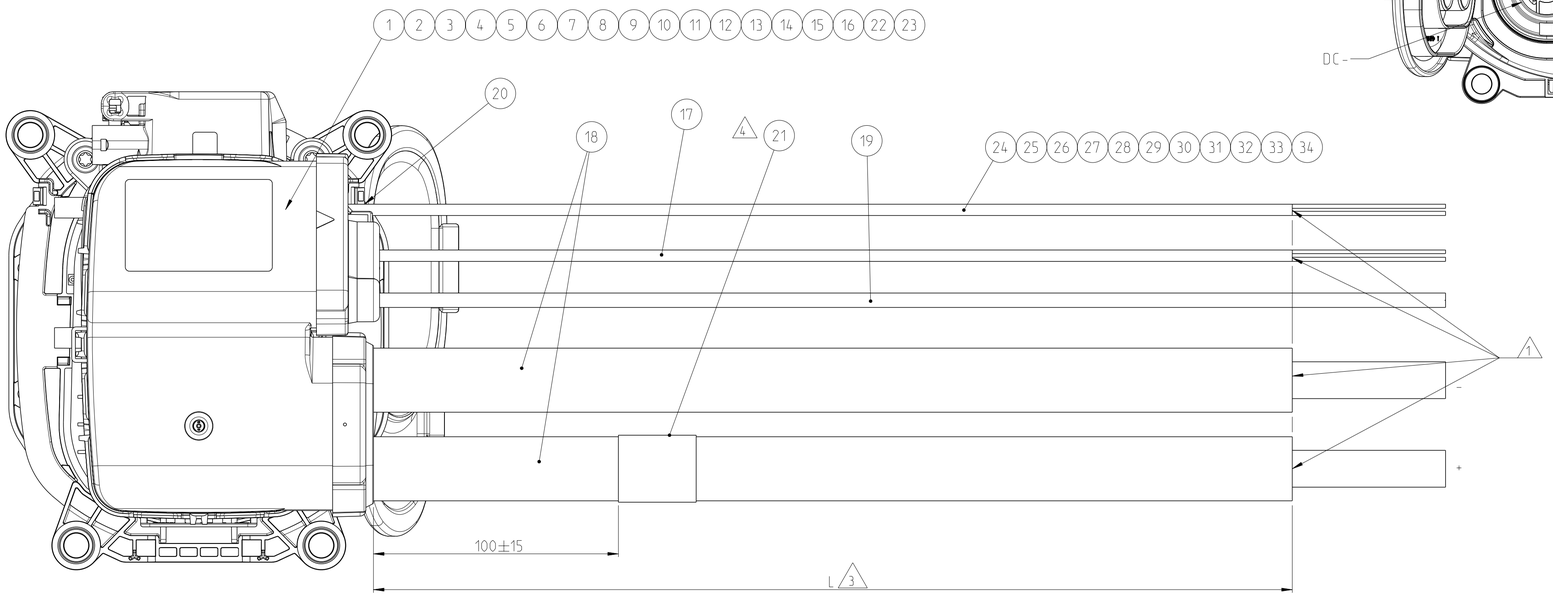

SECTION A-A

3m	3m	3m	3m	3m	3m	1.5m	1.5m	1.5m	1.5m	1.5m	1.5m	SIGNAL CABLE	34
3m	3m	3m	3m	3m	3m	1.5m	1.5m	1.5m	1.5m	1.5m	1.5m	SIGNAL CABLE	33
3m	3m	3m	3m	3m	3m	1.5m	1.5m	1.5m	1.5m	1.5m	1.5m	SIGNAL CABLE	32
3m	3m	3m	3m	3m	3m	1.5m	1.5m	1.5m	1.5m	1.5m	1.5m	SIGNAL CABLE	31
3m	3m	3m	3m	3m	3m	1.5m	1.5m	1.5m	1.5m	1.5m	1.5m	SIGNAL CABLE	30
3m	3m	3m	3m	3m	3m	1.5m	1.5m	1.5m	1.5m	1.5m	1.5m	SIGNAL CABLE	29
3m	3m	3m	3m	3m	3m	1.5m	1.5m	1.5m	1.5m	1.5m	1.5m	SIGNAL CABLE	28
3m	3m	3m	3m	3m	3m	1.5m	1.5m	1.5m	1.5m	1.5m	1.5m	SIGNAL CABLE	27
3m	3m	3m	3m	3m	3m	1.5m	1.5m	1.5m	1.5m	1.5m	1.5m	SIGNAL CABLE	26
3m	3m	3m	3m	3m	3m	1.5m	1.5m	1.5m	1.5m	1.5m	1.5m	SIGNAL CABLE	25
3m	3m	3m	3m	3m	3m	1.5m	1.5m	1.5m	1.5m	1.5m	1.5m	SIGNAL CABLE	24
1	1	1	1	1	1	1	1	1	1	1	1	12POS.MICRO MNL.RCPT HSG	23
11	11	11	11	11	11	11	11	11	11	11	11	TERMINAL MICRO MATE N LOCK	22
1	1	1	1	1	1	1	1	1	1	1	1	LABLE, HELL	21
1	1	1	1	1	1	1	1	1	1	1	1	CAB TIE, CLIP, HELL.T18R-HR-N46	20
3m	3m	3m	3m	3m	3m	1.5m	1.5m	1.5m	1.5m	1.5m	1.5m	PE H&S CABLE 25 SQMM	19
6m	6m	6m	6m	6m	6m	3m	3m	3m	3m	3m	3m	70 mm² Huber+Suhner	18
3m	3m	3m	3m	3m	3m	1.5m	1.5m	1.5m	1.5m	1.5m	1.5m	4X6 mm² Coroplast	17
1	1	-	-	-	-	1	1	-	-	-	-	FLAP, ASSY, INLET COMBO 2, RIGHT	16
-	-	1	1	-	-	-	-	1	1	-	-	FLAP, ASSY, INLET COMBO 2, LEFT	15
1	1	1	1	1	1	1	1	1	1	1	1	MQS BLINDSTOPFEN	14
1	1	1	1	1	1	1	1	1	1	1	1	COVER, CABLE SEAL, COMBO DC	13
1	1	1	1	1	1	1	1	1	1	1	1	FAMILY SEAL, COMBO DC	12
1	1	1	1	1	1	1	1	1	1	1	1	COVER, CABLE SEAL, AC	11
1	1	1	1	1	1	1	1	1	1	1	1	STRAIN RELIEF, AC	10
1	1	1	1	1	1	1	1	1	1	1	1	Family Seal, AC	9
1	-	1	-	1	-	1	-	1	-	1	-	CABLE EXIT, RECT, COMBO RIGHT	8
-	1	-	1	-	1	-	1	-	1	-	1	CABLE EXIT, RECT, COMBO, LEFT	7
2	2	2	2	2	2	2	2	2	2	2	2	DIA 8MM,PIN TERMINAL	6
2	2	2	2	2	2	2	2	2	2	2	2	SEALING	5
1	1	1	1	1	1	1	1	1	1	1	1	PROTECTION CAP CHARGE INLETS	4
1	1	1	1	1	1	1	1	1	1	1	1	PIN DIA 6.0,RIGID,POWER PE	3
4	4	4	4	4	4	4	4	4	4	4	4	DIA 6MM,PIN TERMINAL	2
1	1	1	1	1	1	1	1	1	1	1	1	COMBO 2,CHARGE INLET ASSY, LED	1
1- -6	1- -5	1- -4	1- -3	1- -2	1- -1	0- -6	0- -5	0- -4	0- -3	0- -2	0- -1	DESCRIPTION	ITEM NO.
A	A	A	A	A	A	A	A	A	A	A	A	REVISION OF EACH ASSY NO (WHEN BLANK, USE DWG REVISION)	
QTY REQD PER ASSY												PARTS LIST	

A2 3

WIRING SCHEDULE:
Belegungsplan:

CAVITY-NO.	IDENTIFICATION	WIRE COLOUR	WIRE SECTION
1	L1	BROWN	6mm² (ITEM 17)
2	L2	BLACK	6mm² (ITEM 17)
3	L3	GREY	6mm² (ITEM 17)
4	N	BLUE	6mm² (ITEM 17)
5	GROUND/EARTH	BLACK	25mm² (ITEM 19)
8	DC+	ORANGE	70mm² (ITEM 18)
9	DC-	ORANGE	70mm² (ITEM 18)

3 **LENGTH SCHEDULE:**
Laengentabelle:

TE PART NO	REV	LENGTH L(mm)	TOL	CABLE OUTLET POSITION	FLAP UNIT
2393949-1	A	1500	+30	POSITION 1	NO FLAPS
2393949-2	A	1500	+30	POSITION 2	NO FLAPS
2393949-3	A	1500	+30	POSITION 1	FLAPS OPEN LEFT
2393949-4	A	1500	+30	POSITION 2	FLAPS OPEN LEFT
2393949-5	A	1500	+30	POSITION 1	FLAPS OPEN RIGHT
2393949-6	A	1500	+30	POSITION 2	FLAPS OPEN RIGHT
1-2393949-1	A	3000	+50	POSITION 1	NO FLAPS
1-2393949-2	A	3000	+50	POSITION 2	NO FLAPS
1-2393949-3	A	3000	+50	POSITION 1	FLAPS OPEN LEFT
1-2393949-4	A	3000	+50	POSITION 2	FLAPS OPEN LEFT
1-2393949-5	A	3000	+50	POSITION 1	FLAPS OPEN RIGHT
1-2393949-6	A	3000	+50	POSITION 2	FLAPS OPEN RIGHT

WIRING SCHEDULE FOR SIGNAL CABLE:
Belegungsplan für Signalkabel:

Pin No.	Identification	Wire colour	Wire Section
1	LED GN	GN	0.5mm²
2	LED RD	YE	0.5mm²
3	-	-	-
4	GND LED	BK/OR	0.5mm²
5	LED WT	WH	0.5mm²
6	TDC+	OR	0.5mm²
7	Proxi out	BU	0.5mm²
8	TDC ground	GY	0.5mm²
9	TDC-	RD	0.5mm²
10	T AC	WH/BU	0.5mm²
11	PE S	BK	0.5mm²
12	CP out	VO	0.5mm²

NOTES

1 STRIPPED ONLY OUTER JACKET AND BRAID.
ELECTRICAL TESTING IS ACCORDING APPLICATION SPECIFICATION.

2 APPLICATION SPECIFICATION:
114-94723 CHARGE INLET COMBO 1 IEC 62196-3.

3 CUTTING LENGTHS TO BE FIXED BY MANUFACTURING.

4 MANUFACTURING CODE:
TE PART NO., CURRENT REV. LEVEL AND DATE CODE (DD.MM.YY),
TO BE PRINTED ON LABEL (ITEM 21).
LABEL TO BE APPLIED TO THE CABLE AFTER SUCCESSFUL ELECTRICAL TEST.

A1 5. FLAP ASSY (ITEM 15/16) WILL BE NOT MOUNTED AS SHOWN BUT ATTACHED INTO PACKAGING.

4 **LABEL LEGEND:**
Label Beschriftung:

TE
TE PN: X-2393949-Y Rev. --
DD/MM/YY
ELECTRICAL TEST PASSED

TE PART NO., CURRENT REVISION
TE Teilenummer, aktuelle Revision

PRODUCTION DATE
Produktionsdatum

THIS DRAWING IS A CONTROLLED DOCUMENT.	DWN N. SARATH 12JUL2021	TE Connectivity	
DIMENSIONS: mm	TOLERANCES UNLESS OTHERWISE SPECIFIED: 0 PLC ±, 1 PLC ±, 2 PLC ±, 3 PLC ±, 4 PLC ±, ANGLES ±	CHK M. BLOCK	NAME CHARGING INLET CCS2, CABLE ASSY
		APVD G. LINDEMANN	PRODUCT SPEC 108-94839
		APPLICATION SPEC 114-94723	SIZE A1 · CAGE CODE 00779 · DRAWING NO C-2393949 · RESTRICTED TO -
MATERIAL -	FINISH -	WEIGHT -	
		CUSTOMER DRAWING	SCALE 1:1 · SHEET 1 OF 1 · REV A2

4805 (3/13)