REVISIONS

P	LTR	DESCRIPTION	DATE	DWN	APVD
	A	INITIAL DRAWING	12NOV2021	C.C	I.Y
	A1	ECR-22-153884	19SEP2022	S.T	Z.Z
	A2	ECR-23-182374	25JUL2023	Y.L	Z.Z
	A3	ECR-23-188029	25SEP2023	T.L	Z.Z

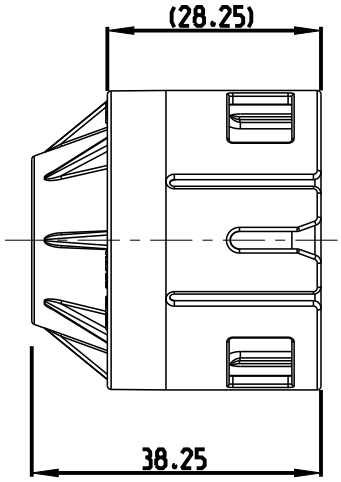

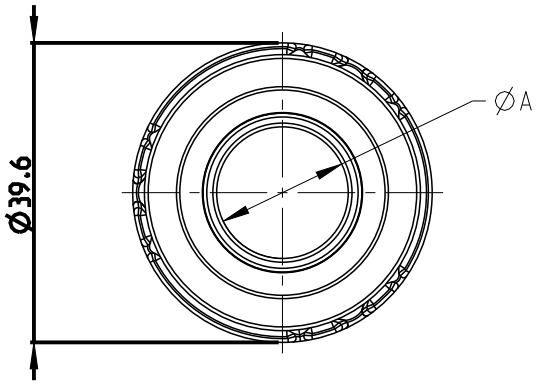

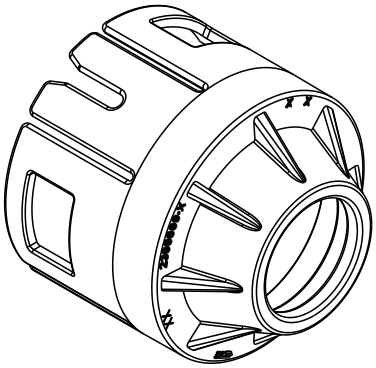

1. MATERIAL: PA66-GF
COLOR: SEE TABLE

2. BULK PACKAGED

A3

PART NO.	DESCRIPTION	COLOR	DIM.A	WEIGHT(g)	CABLE O.D. MIN.	CABLE O.D. MAX.
2399669-5	CABLE COVER - 95SQ (HIGH FLEX)	ORANGE	Ø20	(10.02)	19.1	19.9
2399669-4	CABLE COVER - 150SQ (HIGH FLEX)	ORANGE	Ø25.6	(9.38)	24.5	25.5
2399669-3	CABLE COVER - 120SQ (STANDARD)	ORANGE	Ø23.1	(9.82)	22.2	23.0
2399669-2	CABLE COVER - 95SQ (STANDARD)	ORANGE	Ø20.4	(10)	19.5	20.3
2399669-1	CABLE COVER - 70SQ (STANDARD)	ORANGE	Ø17.4	(10.12)	16.7	17.3

© 2021 TE Connectivity. All Rights Reserved.

DIMENSIONS: mm

TOLERANCES UNLESS OTHERWISE SPECIFIED: ±0.3

0 PLC	±
1 PLC	±0.1
2 PLC	±0.01
3 PLC	±0.001
4 PLC	±0.0001
ANGLES	±

DWN Y.LI 25JUL2023
CHK J.LI 25JUL2023
APVD Z.ZHOU 25JUL2023

PRODUCT SPEC: 108-160407

APPLICATION SPEC: 114-160223/160418

WEIGHT:

MATERIAL: 1

FINISH:

TE Connectivity

NAME: CABLE COVER HVP-HD1400

SIZE: A4 | CAGE CODE: 00779 | DRAWING NO: C-2399669 | RESTRICTED TO: -

CUSTOMER DRAWING | SCALE 1:1 | SHEET 1 OF 1 | REV A3

1469-35 (3/13)