© 2023 TE Connectivity. All Rights Reserved.

REVISIONS					
P	LTR	DESCRIPTION	DATE	DWN	APVD
	A	INITIAL RELEASE	23APR23	L.D	J.Z
	A1	ECN-24-272889	28JUN24	GSK	J.Z

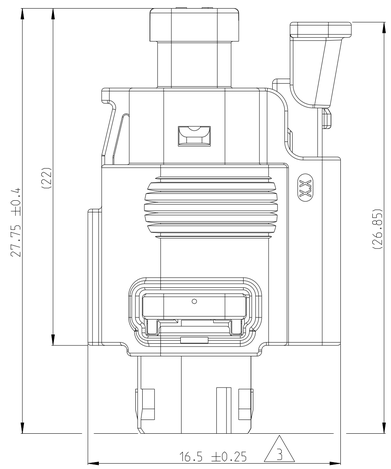

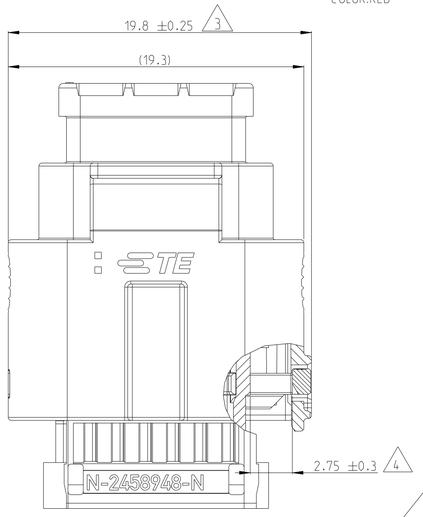

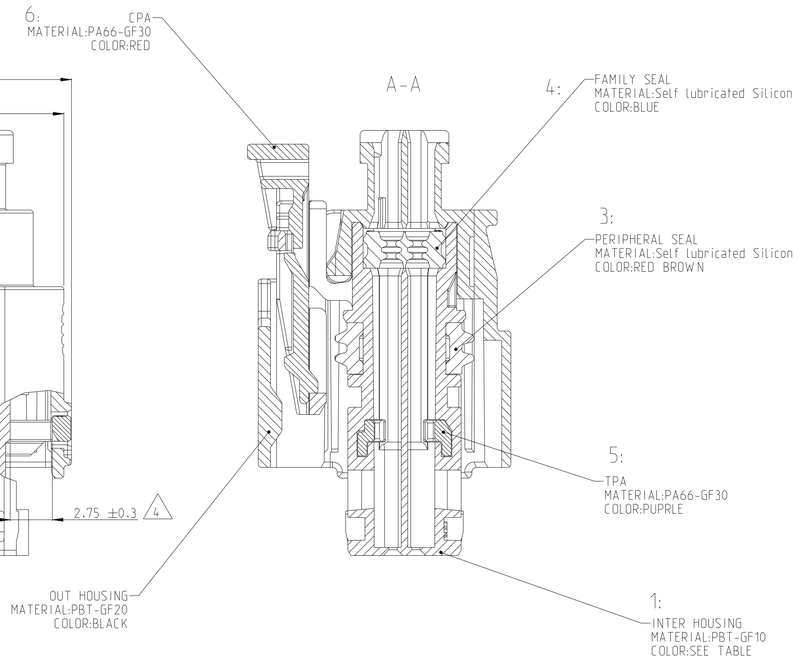

NOTES A1

1 SUITABLE FOR CONTACT SEE DRAWING

CAVITY		1 - 12
SOCKET CONTACT		NanoMQS
max. ISOØ		1.0 - 1.3
ACCORDING max. DGB [mm²]	FLR	0.35
TE DRAWING		1703930

2 RECYCLED MATERIAL PERMISSIBLE MAX. 25%

3 WARPAGE PERMITTED TO MAX. (TO MINUS-DIRECTION)

4 CONDITION ON DELIVERY:
SECONDARY LOCKING DEVICE AND CPA IN PRELOCKING POSITION - IF IN ENDLOCKING POSITION AFTER TRANSPORTATION, PLEASE RELOCK IN ACCORDANCE TO APPLICATION SPECIFICATION

5 CHANGES ONLY WITH APPROVAL OF THE RESPONSIBLE DEPARTMENT

6 THE MANUFACTURER CAN CHANGE DETAILS OF THE DESIGN

7 PRESSURE MARK OR SLIGHT DAMAGE OF PLASTIC WITHOUT FUNCTIONAL EFFECT ON THE COUNTER PART ARE PERMITTED

8 SLIGHT DIFFERENCES IN RAL-COLOUR WITHIN THE BASE-COLOUR AND LOCAL COLOUR DIFFERENCES (COLOUR INCLUSIONS) OF THE PART ARE PERMITTED

9 PART LINE PERMITTED MAX. 0.3

10 SPLIT LINE PERMITTED MAX. 0.3

11 PACKAGING: LOOSE PIECE

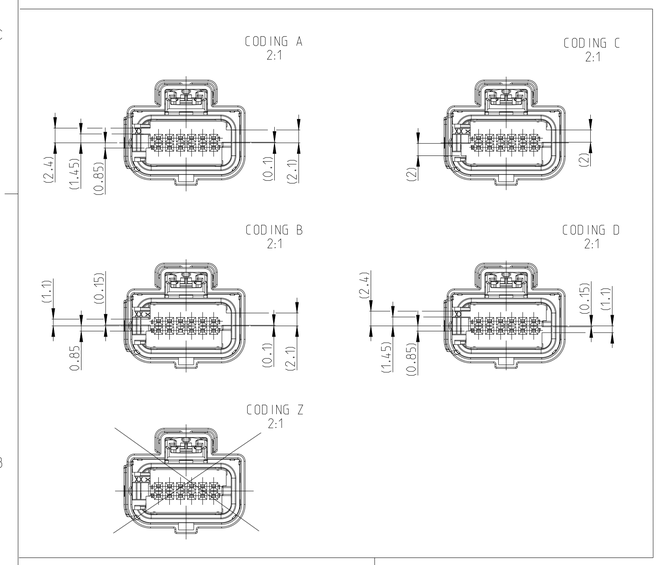

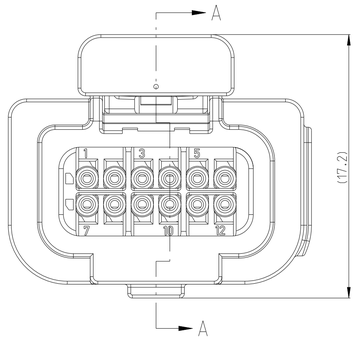

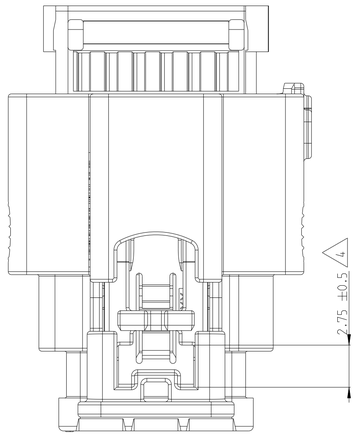

2.RETAINER AND CPA IN END-LOCKED POSITION

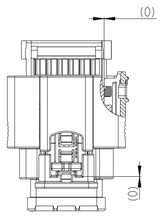

2:1

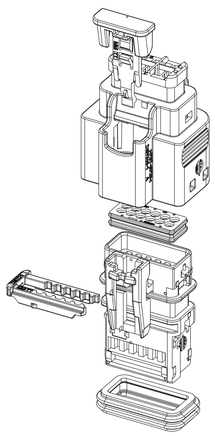

-1 AS SHOWN

1-2458948-9	A	Z	WATERBLUE		
2458948-4	A	D	CLARET VIOLET		
2458948-3	A	C	BLUE		
2458948-2	A	B	NATURAL		
2458948-1	A	A	BLACK	-	-
TE ORDER NO.	REV.	COD.	SURFACE	-	-
			COLOUR		

DIESE ZEICHNUNG IST EIN KONTROLLIERTES DOKUMENT.
BEMASSUNGEN UND TOLERANZEN GEMAESS GPS (ISO STANDARDS).

THIS DRAWING IS A CONTROLLED DOCUMENT.
DIMENSIONING AND TOLERANCING PER GPS (ISO STANDARDS).

DIMENSIONS: mm

TOLERANCES UNLESS OTHERWISE SPECIFIED:
0 PLC ±
1 PLC ± DIN
2 PLC ± 16742-TG6
3 PLC ±
4 PLC ±
ANGLES ±2°

MATERIAL - -

FINISH - -

DWN	L.DONG	23APR2023
CHK	S.FAN	23APR2023
APVD	J.ZONG	23APR2023
PRODUCT SPEC		
APPLICATION SPEC		
WEIGHT	-	

TE Connectivity

NAME 12POS.NANO MQS.REC HSG ASSY.SLD
-
-

SIZE	CAGE CODE	DRAWING NO	RESTRICTED TO
A1	00779	C-2458948	-

CUSTOMER DRAWING | SCALE 5:1 | SHEET 1 OF 1 | REV A1

4805 (3/13)