© – TE Connectivity. All Rights Reserved.

REVISIONS					
P	LTR	DESCRIPTION	DATE	DWN	APVD
	A1	REVISED PER ECN-24-262399	24APR2024	ED	WH

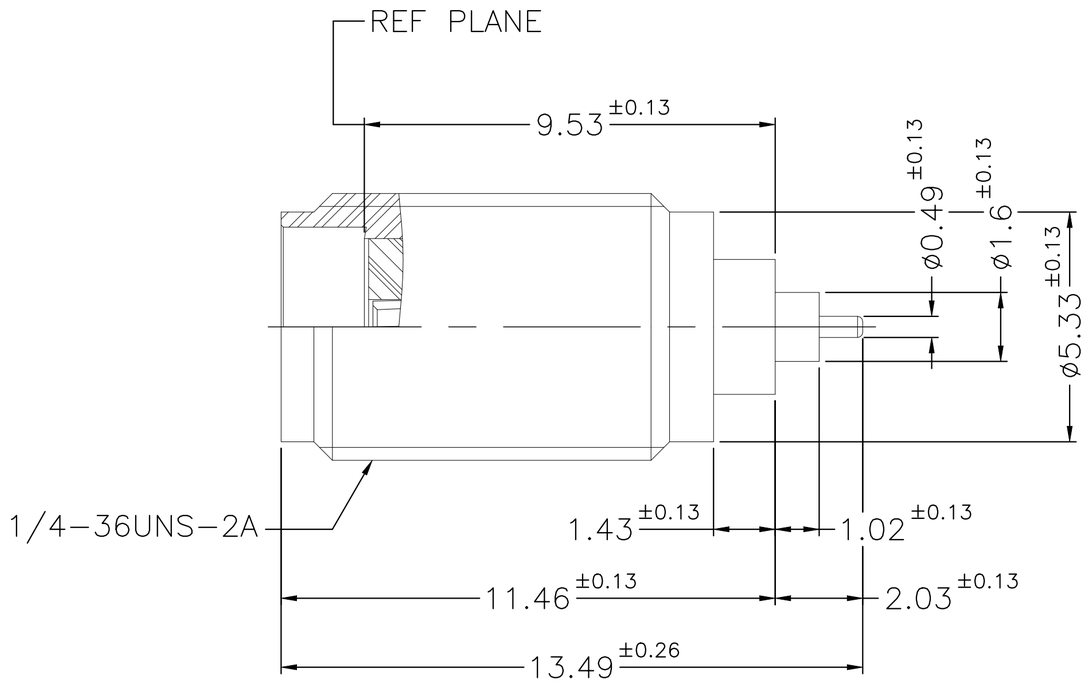

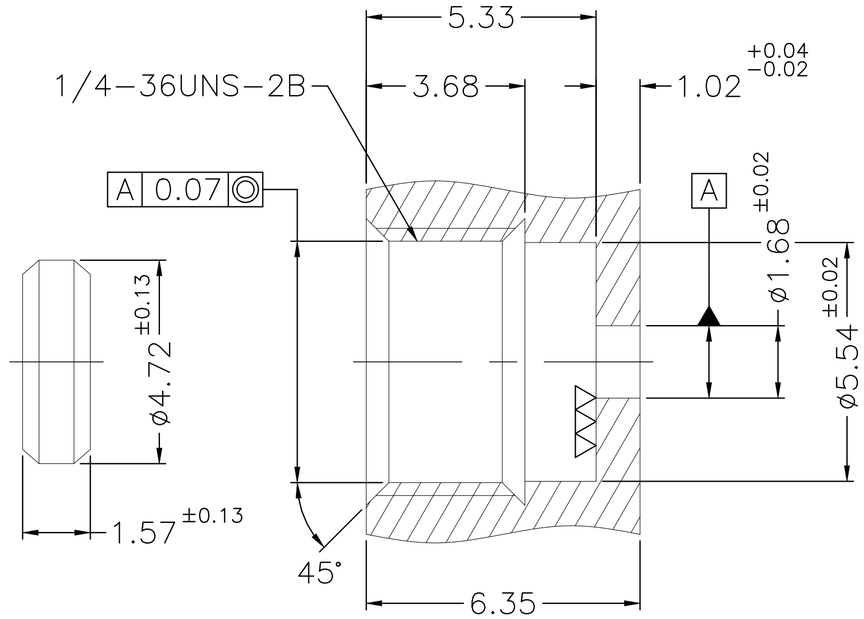

RECOMMENDED MOUNTING HOLE

NOTES:

1 PACK IN ACCORDANCE WITH TE SPEC 107-3275;

2 ALL DIMENSIONS ARE NOMINAL FOR REFERENCE ONLY UNLESS OTHERWISE STATED;

3 ELECTRICAL CHARACTERISTICS :
FREQUENCY RANGE : DC-26.5GHz
NOMINAL IMPEDANCE : 50 OHMS
INSULATION RESISTANCE : 5000 MOHMS
WORKING VOLTAGE : 335 VRMS MAX
DIELECTRIC WITHSTANDING VOLTAGE : 1000 VOLTS MAX
VSWR : 1.28 MAX(DC-26.5GHz)
CONTACT RESISTANCE :
CENTER CONTACT : 10 mOHMS MAX
OUTER CONTACT : 2 mOHMS MAX
LEAKAGE RATE: $1X10^{-8}$ atm.cc/sec;

4 MECHANICAL CHARACTERISTICS :
DURABILITY : 500 CYCLES
ENGAGEMENT AND DISENGAGEMENT FORCE:
ENGAGEMENT: 2 in-lbs MAX
DISENGAGEMENT: 2 in-lbs MAX;

5 TEMPERATURE RANGE: -65°-+165°;

6 RoHS: COMPLIANT;

7 SILVER PL. 100u" MIN. THICK OVER COPPER PL. 50u" MIN. THICK;

8 GOLD PL. 35u" MIN. THICK OVER ELECTROLESS NICKEL PL. 100u" MIN. THICK;

9 GOLD PL. 50u" MIN. THICK OVER ELECTROLESS NICKEL PL. 100u" MIN. THICK;

QUANTITY PER ASSY	PARTS LIST				
	1	NOTE 7	SAE C12L14 STEEL	METAL GASKET	5
	1	NATURAL	PTFE	INSULATOR	4
	1	NOTE 9	BERYLLIUM COPPER	CONTACT PIN	3
	1	NATURAL	PTFE	INSULATOR	2
	1	NOTE 8	KOVAR (IRON-NICKEL-COBALT)	SUB-ASSEMBLY	1
	1	NATURAL	Neg BH-14G/K		
	1	NOTE 8	STAINLESS STEEL		
	2476193-1	PLATING	MATERIAL	DESCRIPTION	ITEM

THIS DRAWING IS A CONTROLLED DOCUMENT.

DIMENSIONS: mm

TOLERANCES UNLESS OTHERWISE SPECIFIED:
0 PLC ± -
1 PLC ± 0.3
2 PLC ± 0.2
3 PLC ± 0.1
4 PLC ± -
ANGLES ± 5°

MATERIAL: SEE TABLE

FINISH: -

DWN ED 13DEC2023
CHK ED 13DEC2023
APVD WH 13DEC2023
PRODUCT SPEC —
APPLICATION SPEC —
WEIGHT 12.4g

TE Connectivity

NAME
SMA HERMETICALLY-SEALED
PANEL FEEDTHROUGH JACK RECEPTACLE,26.5G
—

SIZE	CAGE CODE	DRAWING NO	RESTRICTED TO
A2	00779	C-2476193	—

CUSTOMER DRAWING | SCALE 8:1 | SHEET 1 OF 1 | REV A1

2476193

1471-9 (1/15)