Active

THIS DRAWING IS UNPUBLISHED. RELEASED FOR PUBLICATION 20
© COPYRIGHT 20 BY - ALL RIGHTS RESERVED.

PART NUMBER	REV	FIRST USED	STROKE	SLIDE	OFFSET DIRECTION	FEED STYLE
2844940-1	E	-	30	NORMAL	REAR	SIDE
2844940-2	E	-	50	NORMAL	REAR	SIDE
2844940-3	E	-	30	TALL	FRONT	END
2844940-4	E	-	50	TALL	REAR	END
2844940-5	E	-	50	NORMAL	FRONT	SIDE
2844940-6	E	-	50	TALL	REAR	SIDE
2844940-7	E	-	30	NORMAL	REAR	END
2844940-8	E	2151625	30	TALL	FRONT	SIDE

REVISIONS

P	LTR	DESCRIPTION	DATE	DWN	APVD
	E2	ADDED -5	27APR2020	LG	TE
	E3	ECR-20-006386 ADDED -6	04MAY2020	JAH	GB
	E4	ADDED -7	27SEP2022	JWC	GB
	E5	ADDED -8	29JUN2023	JWC	GB

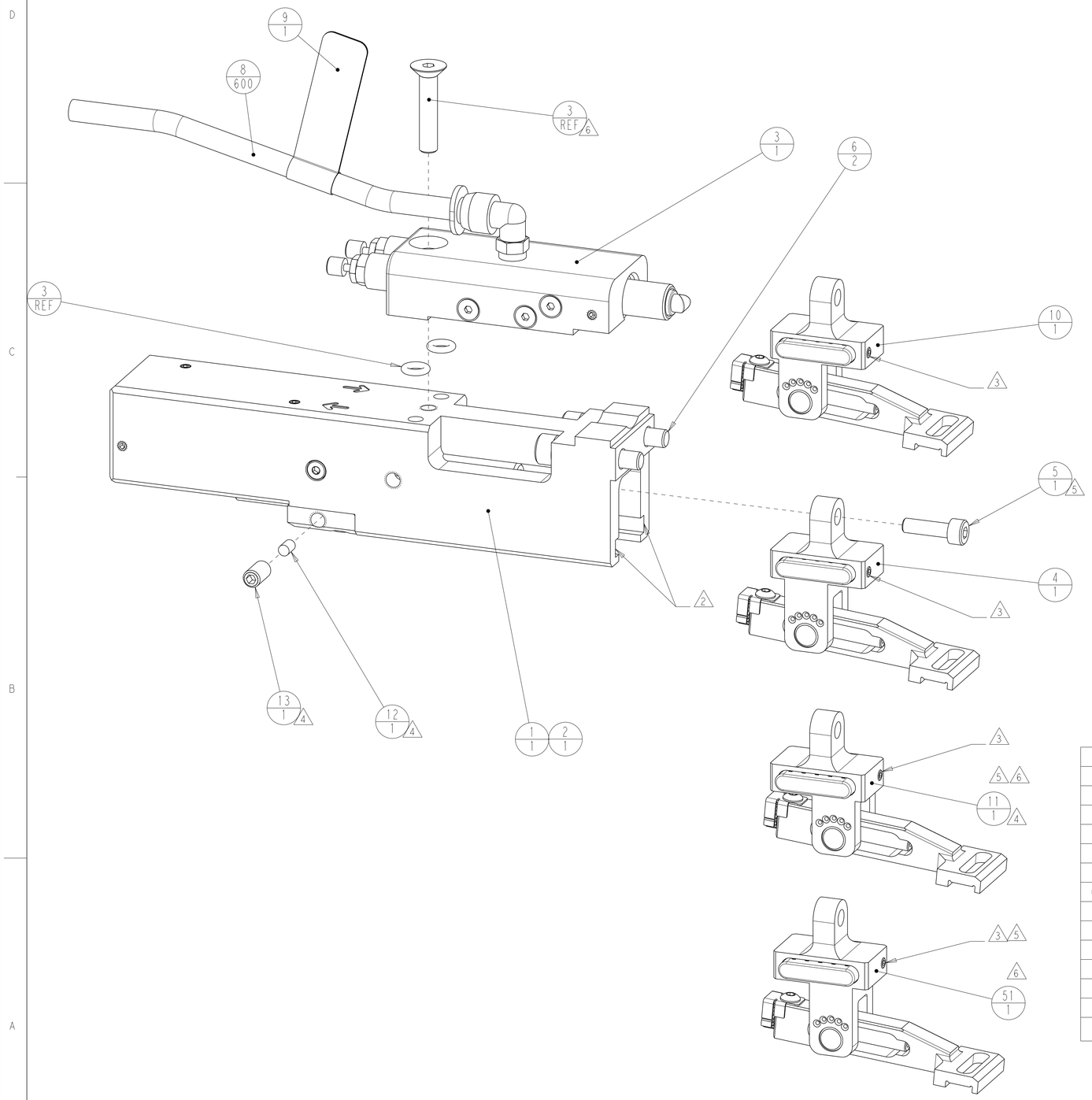

1. RECOMMENDED SPARE PARTS - NONE

2. LUBRICATE SLOTS OF ITEM 1 OR 2 WITH MAGNALUBE-G BEFORE ASSEMBLING ITEM 4.

3. ADJUST SET SCREWS OF ITEM 4,10, OR 11 AT ASSEMBLY TO ALLOW 0.08mm MAX CLEARANCE BETWEEN THE SLIDE ASSEMBLY AND SLOTS OF THE AIR CYLINDER. SLIDE ASSEMBLY SHOULD SLIDE FREELY.

4. FOR -1, -2, -5 AND -6 ASSEMBLIES, INSTALL ITEMS 12 AND 13 AS SHOWN. FOR -3,-4 AND -7 ASSEMBLIES, INSTALL FROM FAR SIDE.

5. APPLY ITEM 50 (LOCTITE) TO ITEM 5 (SCREW) AND TORQUE TO 4.0Nm (35in-lbs).

6. APPLY ITEM 50 (LOCTITE) TO SCREW FROM ITEM 3 (VAVLE ASSY) AND TORQUE TO 3.4Nm (30in-lbs).

-8	-7	-6	-5	-4	-3	-2	-1	U/M	PART NO	DESCRIPTION	ITEM NO
-	-	-	1	-	-	-	-	-	2844924-4	SLIDE ASSEMBLY	51
AR	AR	AR	AR	AR	AR	AR	AR	--	1-23419-5	SEALANT, LOCTITE #222	50
1	1	1	1	1	1	1	1	-	18032-6	SCR, SET, FLT PNT, M5 X 10.0	13
1	1	1	1	1	1	1	1	-	690191-1	PLUG,NYLON	12
1	-	-	-	-	1	-	-	-	2844924-3	SLIDE ASSEMBLY	11
-	-	1	-	1	-	-	-	-	2844924-2	SLIDE ASSEMBLY	10
1	1	1	1	1	1	1	1	-	2161567-1	TAG, AIR SUPPLY LINE	9
600	600	600	600	600	600	600	600	mm	2030758-3	TUBING, POLYURETHANE, 6mm	8
2	2	2	2	2	2	2	2	-	2-18023-2	SCR, SKT HD CAP M5 X 25.0	6
1	1	1	1	1	1	1	1	-	9-18023-6	SCR, SKT HD CAP M4 X 14.0	5
-	1	-	-	-	-	1	1	-	2844924-1	SLIDE ASSEMBLY	4
1	1	1	1	1	1	1	1	-	2844941-1	AIR FEED VALVE ASSY	3
-	-	1	1	1	-	1	-	-	2844946-2	AIR CYLINDER	2
1	1	-	-	-	1	-	1	-	2844946-1	AIR CYLINDER	1

THIS DRAWING IS A CONTROLLED DOCUMENT.

DIMENSIONS: mm

TOLERANCES UNLESS OTHERWISE SPECIFIED:
0 PLC ±-
1 PLC ±0.5
2 PLC ±0.13
3 PLC ±0.013
4 PLC ±-
ANGLES ±5°

MATERIAL - -

FINISH - -

DWN D.J.GOOD 29-Jun-23
CHK C.KARRASCH 30-Apr-18
APVD C.KARRASCH 30-Apr-18

PRODUCT SPEC -
APPLICATION SPEC -
WEIGHT -

TE Connectivity

NAME AIR FEED MODULE - -

SIZE	CAGE CODE	DRAWING NO	RESTRICTED TO
A1	00779	C-2844940	-

CUSTOMER DRAWING SCALE 3:2 SHEET 1 OF 1 REV E5

4805 (3/13)