© 2021 TE Connectivity. All Rights Reserved.

EC No.	Battery Disconnector 2x200A	Page 1 of 1

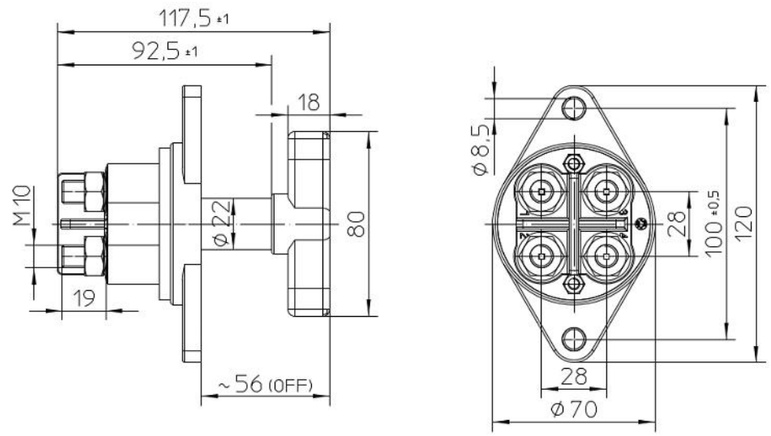

Circuit

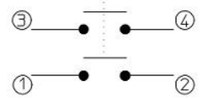

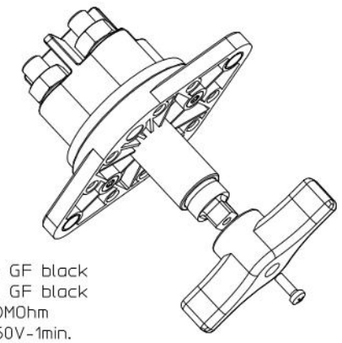

For this drawing we reserve the copyright in accordance with DIN ISO 16016

Technical Data:

Case Material	PA GF black
Switch Lever Material	PA GF black
Min.Insulation Resistance	100MOhm
Dielectric Withstanding Voltage	1050V-1min.
Max.Contact Drop during Resistive Load	150mV
Voltage	up to 32VDC
Duty Rating	2x 200A
Overload	2x 500A-180sec.
	2x 1000A-30sec.
Sealing	IP 67/ IEC 529
Vibration	4G/ 50-2000Hz
Shock G-Lever	6G/ 11ms
Weight	~370g / 0.81 pound
Temperature Range	-40°C to +85°C
Wire Section (At Nominal Load)	min. 70mm2
Mounting Position	optional
Switch Lever	not removeable
Torque (Main Terminals)	15-20Nm

	Date	Name		Scale
Create	29.07.2019	Seege	mm	1:2
Edited	26.09.2019	Seege	General Tolerances DIN ISO 2768 cL	
Check	01.10.2019	Grind		

Drawing No: 35-224-141-S

NSN.:

REVISIONS

P	LTR	DESCRIPTION	DATE	DWN	APVD
	A	ECN-24-268451 TE STANDARD	30MAY2024	KS	RB

NOTE
Bemerkungen:

1 TE-CONNECTIVITY ORDER-NUMBER
TE-connectivity Bestellnummer

2 DO NOT SWITCH UNDER LOAD!
Nicht unter Last schalten!

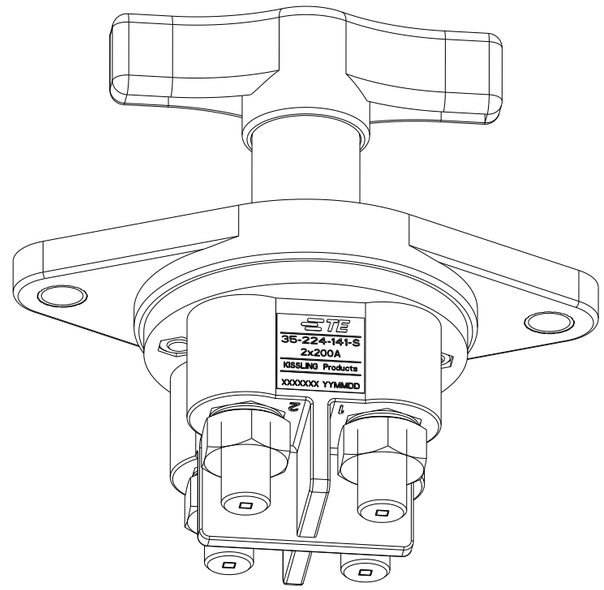

K1138242 1	A	BATTERY DISCONNECTOR 2x200A Batterietrennschalter 2x200A	1
TE ORDER-NO.	REV.	DESCRIPTION	ITEM NO

THIS DRAWING IS A CONTROLLED DOCUMENT.

DIMENSIONS: mm

TOLERANCES UNLESS OTHERWISE SPECIFIED: DIN ISO 2768 cL

0 PLC	±
1 PLC	±
2 PLC	±
3 PLC	±
4 PLC	±
ANGLES	±

MATERIAL

FINISH

DWN	K.Seeger	29JUL2019
CHK	K.Seeger	26SEP2019
APVD	U.Grindemann	01OCT2019
PRODUCT SPEC		
APPLICATION SPEC		
WEIGHT		

TE Connectivity

NAME
BATTERY DISCONNECTOR 2x200A
Batterietrennschalter 2x200A

SIZE	CAGE CODE	DRAWING NO	RESTRICTED TO
A3	00779	C-35-224-141-S	-

CUSTOMER DRAWING | SCALE | SHEET 1 OF 1 | REV A