© 2024 TE Connectivity. All Rights Reserved.

EC No.

Battery Disconnector 2x500A

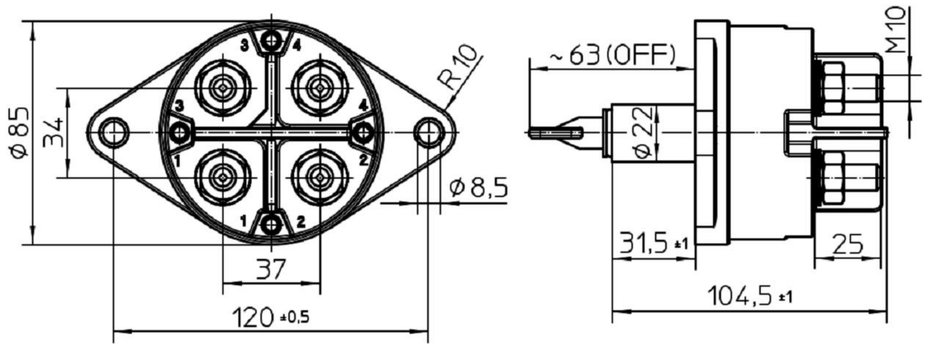

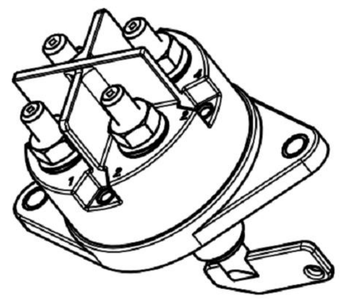

Circuit:

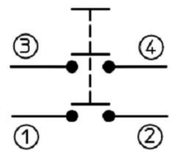

Technical Data:

Case Material:Cover:.....Vyncolit black
Base Plate:.....PA GF black
Switch Lever Material:.....PA GF black
Min. Insulation Resistance:.....100MOhm
Dielectric Withstanding Voltage:.....1050V-1min
Max. Contact Voltage Drop:.....150mV
Voltage:.....up to 32VDC
Continuous Rating:.....2x500A
Overload:.....2x2000A-1.5min
.....2x2500A-10sec
Sealing:.....IP 67/IEC 529
Vibration:.....10G 18-500Hz
Shock G-Level:.....50G,11ms
Duty Shock-6000 cycles:.....40G,6ms
Weight:.....650g/1.25Pound
Temperature Range:.....-40°C to +85°C
Wire Section(at nominal load):.....min.250mm2
Key:.....removeable,black
Max. Torque (Main Contacts):.....15-20Nm

	Date	Name	mm	Scale 1:2
Drawn	27.04.2016	NMiel	General Tolerances	
Check	28.04.2016	Grind		

Drawing No: 35-525-100-S

NSN:

REVISIONS

P	LTR	DESCRIPTION	DATE	DWN	APVD
	A	TE STANDARD UPDATED	20JUN2024	KS	RB

NOTE
Bemerkungen:

1 TE-CONNECTIVITY ORDER-NUMBER
TE-Connectivity Bestellnummer

2 DO NOT SWITCH UNDER LOAD!
Nicht unter Last schalten!

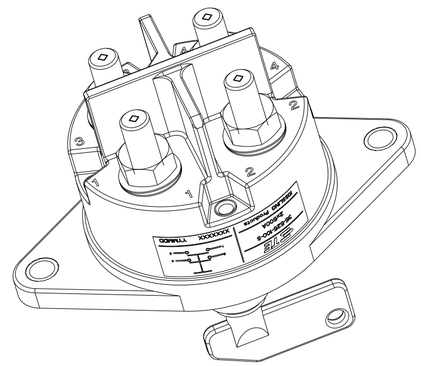

TE ORDER-NO.	REV.	DESCRIPTION	ITEM NO
1 K1134526	A	BATTERY DISCONNECTOR 2x500A Batterietrennschalter 2x500A	1

THIS DRAWING IS A CONTROLLED DOCUMENT.

DIMENSIONS: mm

TOLERANCES UNLESS OTHERWISE SPECIFIED: DIN ISO 2768 cL
0 PLC ±
1 PLC ±
2 PLC ±
3 PLC ±
4 PLC ±
ANGLES ±

MATERIAL

FINISH

DWN N.Mielke 27APR2016
CHK N.Mielke 27APR2016
APVD U.Grindemann 28APR2016

PRODUCT SPEC

APPLICATION SPEC

WEIGHT

TE Connectivity

NAME
BATTERY DISCONNECTOR 2x500A
Batterietrennschalter 2x500A

SIZE	CAGE CODE	DRAWING NO	RESTRICTED TO
A2	00779	C-35-525-100-S	-

CUSTOMER DRAWING

SCALE | SHEET 1 OF 1 | REV A