DRAWING MADE IN AMERICAN PROJECTION

1. PARTS COMPLY WITH AMP SOLDERABILITY SPEC. NO. 109-11-3
2. DIMENSION SHOWN REPRESENT PRODUCT IN DRY CONDITION. ADDITIONAL 2% GROWTH DUE TO END USE LOCATION MOISTURE ABSORPTION MAY OCCUR AND SHOULD BE ACCOUNTED FOR.

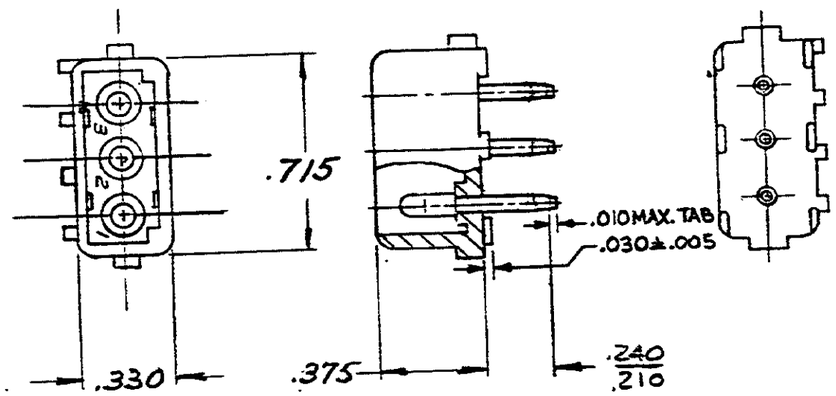

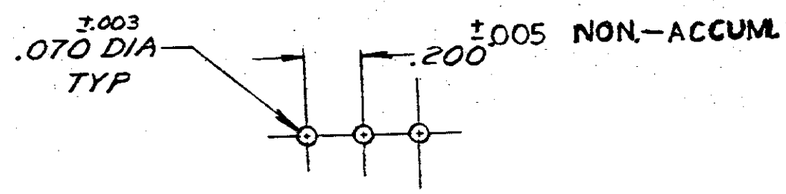

RECOMMENDED LAYOUT FOR .125 THICK P.C. BOARD

350423-1	NYLON - NATURAL	COPPER ALLOY — PRE-TIN
ASSEMBLY NO.	HSG. MATL & COLOR	PIN MATL & FINISH

© 1973 BY AMP INCORPORATED. ALL RIGHTS RESERVED.
AMP PRODUCTS COVERED BY PATENTS AND/OR PATENTS PENDING.

CUSTOMER COPY REFERENCE ONLY

NUMBER	REQUIRED PER ASSEMBLY	DESCRIPTION
350423		

CTR	REVISION RECORD	DR	CHK	DATE
N1	REVISED PER ECR-21-117185	PJ	VS	20OCT2021
N	OBSOLETE -2 PER ECN CM-2709	NLG	RS	6-26-72
M	OBS. 9-1 PER CM-760	PAC	TB	4-27-60

9. Sloman 6-21-73
6-28-73

MATERIAL AND FINISH: SEE TABLE

WIRE - RANGE - INSULATION: #

TOLERANCE EXCEPT AS NOTED: ±.015 ±1° 0'

SCALE: #

TE Connectivity

LOC CM B NO 350423 REV N1

NAME: 3 CIRCUIT MATE-N-LOK P.C. BOARD HEADER

DIMENSIONS IN INCHES. DO NOT SCALE PRINT.

AMP 1883 REV 11/65