© 2004 TE Connectivity. All Rights Reserved.

REVISIONS					
P	LTR	DESCRIPTION	DATE	DWN	APVD
	C1	REVISED PER ECN-23-236865	08NOV2023	AP	IT

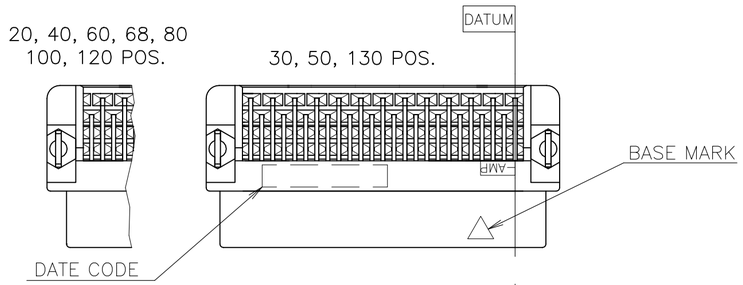

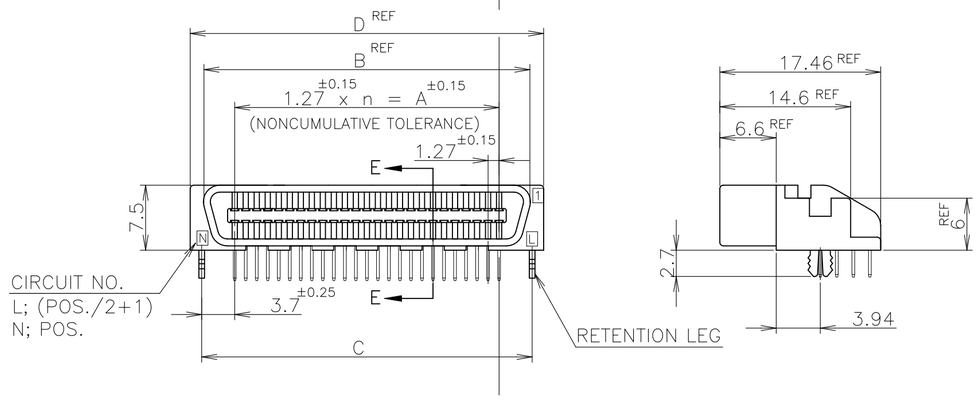

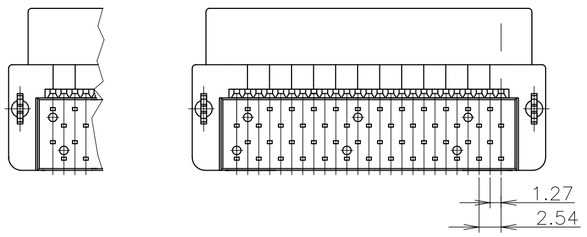

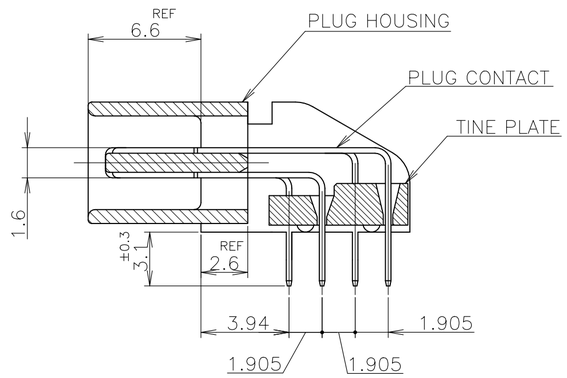

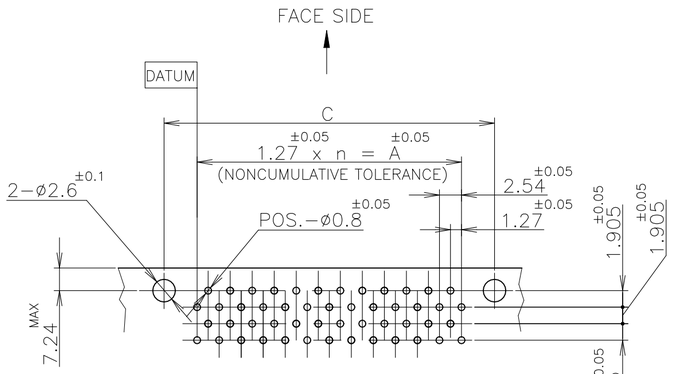

30, 50, 130 POS.
P.C. BOARD DESIGN
(CONNECTOR MOUNT SIDE)

20, 36, 40
60, 68, 80
100, 120 POS.

1 NUMBER "n" IS COUNTED FROM DATUM
(CIRCUIT NO.1 IS "AMP" MARK SIDE.)

2 MATERIA: HOUSING, 66 NYLON (GF) UL 94V-0, BLACK.
: CONTACT, PHOSPHOR BRONZE.
: RETENTION LEG; BRASS.

3 FINISH: CONTACT; Au AT CONTACT AREA (SEE TABLE), TIN AT TINE, OVER Ni.
RETENTION LEG; TIN UNDER Ni.

OBSOLETE	~~6-~~	~~-2~~		~~130~~	~~64~~	~~81.28~~	~~89.62~~	~~88.68~~	~~92.48~~
OBSOLETE	~~6-~~	~~-1~~		~~120~~	~~59~~	~~74.93~~	~~83.27~~	~~82.33~~	~~86.13~~
	6-	-0		100	49	62.23	70.57	69.63	73.43
	5-	-9		80	39	49.53	57.87	56.93	60.73
	5-	-8		68	33	41.91	50.25	49.31	53.11
	5-	-7		60	29	36.83	45.17	44.23	48.03
	5-	-6		50	24	30.48	38.82	37.88	41.68
	5-	-5		40	19	24.13	32.47	31.53	35.33
	5-	-4		36	17	21.59	29.93	28.99	32.79
OBSOLETE	~~5-~~	~~-3~~		~~30~~	~~14~~	~~17.78~~	~~26.12~~	~~25.18~~	~~28.98~~
	5-	-1	0.00076	20	9	11.43	19.77	18.83	22.63
OBSOLETE	~~4-~~	~~-2~~		~~130~~	~~64~~	~~81.28~~	~~89.62~~	~~88.68~~	~~92.48~~
	4-	-1		120	59	74.93	83.27	82.33	86.13
	4-	-0		100	49	62.23	70.57	69.63	73.43
OBSOLETE	~~3-~~	~~-9~~		~~80~~	~~39~~	~~49.53~~	~~57.87~~	~~56.93~~	~~60.73~~
	3-	-8		68	33	41.91	50.25	49.31	53.11
	3-	-7		60	29	36.83	45.17	44.23	48.03
	3-	-6		50	24	30.48	38.82	37.88	41.68
	3-	-5		40	19	24.13	32.47	31.53	35.33
OBSOLETE	~~3-~~	~~-4~~		~~36~~	~~17~~	~~21.59~~	~~29.93~~	~~28.99~~	~~32.79~~
	3-	-3		30	14	17.78	26.12	25.18	28.98
	3-	-1	0.0005	20	9	11.43	19.77	18.83	22.63
OBSOLETE	~~1-~~	~~-2~~		~~130~~	~~64~~	~~81.28~~	~~89.62~~	~~88.68~~	~~92.48~~
	1-	-1		120	59	74.93	83.27	82.33	86.13
	1-	-0		100	49	62.23	70.57	69.63	73.43
OBSOLETE	~~-9~~			~~80~~	~~39~~	~~49.53~~	~~57.87~~	~~56.93~~	~~60.73~~
		-8		68	33	41.91	50.25	49.31	53.11
		-7		60	29	36.83	45.17	44.23	48.03
OBSOLETE	~~-6~~			~~50~~	~~24~~	~~30.48~~	~~38.82~~	~~37.88~~	~~41.68~~
OBSOLETE	~~-5~~			~~40~~	~~19~~	~~24.13~~	~~32.47~~	~~31.53~~	~~35.33~~
	-4			36	17	21.59	29.93	28.99	32.79
	-3			30	14	17.78	26.12	25.18	28.98
	5175472-1		0.0002	20	9	11.43	19.77	18.83	22.63
	PART NO.		Au PLATE	POS.	n	A	B	C	D

5175472

LEAD FREE

THIS DRAWING IS A CONTROLLED DOCUMENT.

DIMENSIONS: mm

TOLERANCES UNLESS OTHERWISE SPECIFIED:
0 PLC ±
1 PLC ± -
2 PLC ± -
3 PLC ± -
4 PLC ± -
ANGLES ± -

GENERAL TOLERANCE
10 ≧ : ±0.2
30≧ > 10: ±0.25
100 ≧ > 30: ±0.3
ANGLES: ±3°

MATERIAL 2
FINISH 3

DWN Julyee Zhu 18AUG2004
CHK Steven Yao 18AUG2004
APVD Ikuo Enomoto 18AUG2004
PRODUCT SPEC 108-60038
APPLICATION SPEC
WEIGHT ~~0.000000~~
CUSTOMER DRAWING

TE Connectivity

NAME
AMP CHAMP .050 CONNECTOR (B-T-B)
PLUG CONNECTOR
(HORIZONTAL WITH RETENTION LEG)

SIZE	CAGE CODE	DRAWING NO	RESTRICTED TO
A2	00779	C-5175472	—

SCALE NTS | SHEET 1 OF 1 | REV C1

1471-9 (1/15)