THIS DRAWING IS UNPUBLISHED. RELEASED FOR PUBLICATION -,- .
© COPYRIGHT - BY TYCO ELECTRONICS CORPORATION. ALL RIGHTS RESERVED.

LOC	DIST
AJ	16

REVISIONS

P	LTR	DESCRIPTION	DATE	DWN	APVD
	0	REV PER EC-0S14-0496-04	31JAN2005	AF	JGH

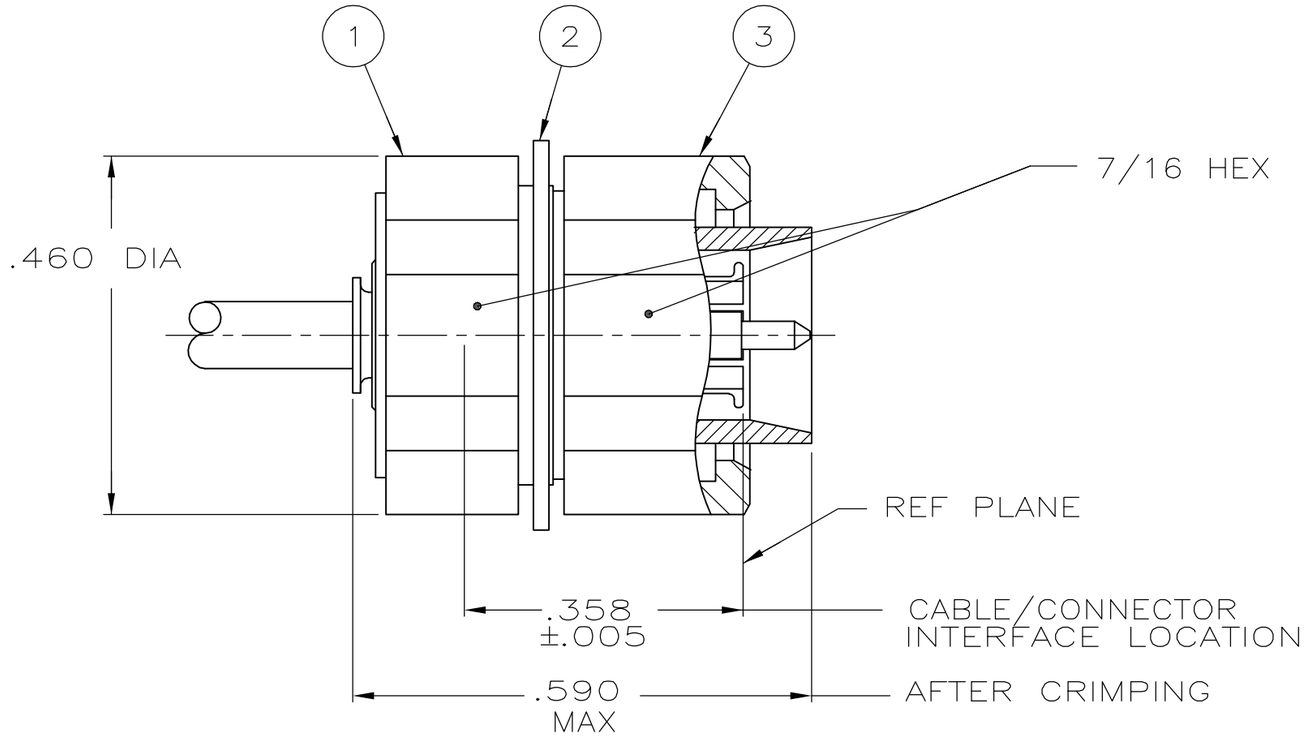

1. FOR USE WITH RG-405, .086 SEMI-RIGID CABLE
2. USE CRIMPING TOOL 59980-1
3. ACCOMODATES .050-.150 THK PANEL
4. STRAIGHT CABLE REQUIRED TO APPLY CONNECTOR
5. PRODUCT IS DESIGNED TO MEET PRODUCT SPEC 108-12106

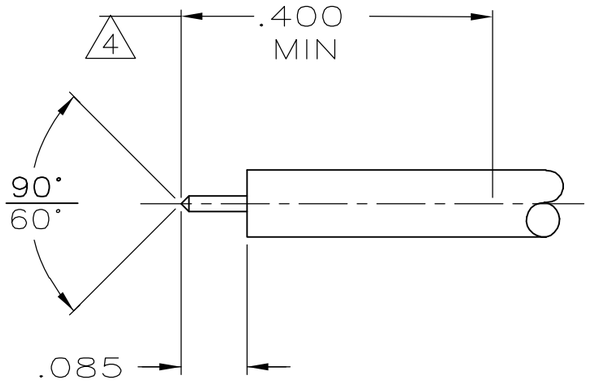

RECOMMENDED STRIP LENGTH

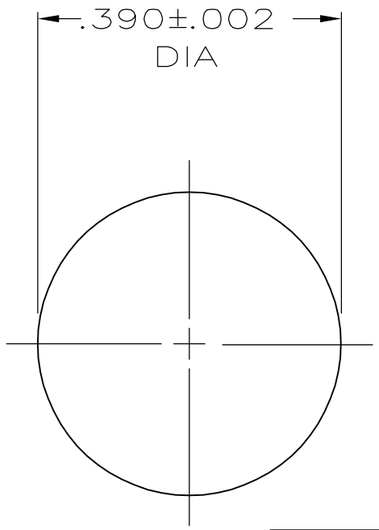

RECOMMENDED MOUNTING HOLE

QTY	PART NUMBER	DESCRIPTION	ITEM
1	222219-2	NUT,MOUNTING	3
1	1-329492-1	LOCKWASHER	2
1	222217-1	PLUG ASSY	1

THIS DRAWING IS A CONTROLLED DOCUMENT.

DIMENSIONS: INCHES

TOLERANCES UNLESS OTHERWISE SPECIFIED:
0 PLC ± -
1 PLC ± -
2 PLC ± .008
3 PLC ± -
4 PLC ± -
ANGLES ± -

MATERIAL -

FINISH -

DWN A. FERNANDEZ-DOCK5 31JAN2005
CHK J. HAVENER 31JAN2005
APVD J. HAVENER 31JAN2005
PRODUCT SPEC -
APPLICATION SPEC -
WEIGHT -

tyco Electronics
Tyco Electronics Corporation
Harrisburg, PA 17105-3608

NAME
PLUG,BULKHEAD,BMB
MOUNT,BLIND MATE 3.5 MM
-

SIZE	CAGE CODE	DRAWING NO	RESTRICTED TO
A3	00779	C-5222197	-

CUSTOMER DRAWING

SCALE 5:1 SHEET 1 OF 1 REV 0

AMP 1470-19 REV 31MAR2000