© – TE Connectivity. All Rights Reserved.

REVISIONS					
P	LTR	DESCRIPTION	DATE	DWN	APVD
	B5	ECR-23-187177	15SEP2023	SS	WH

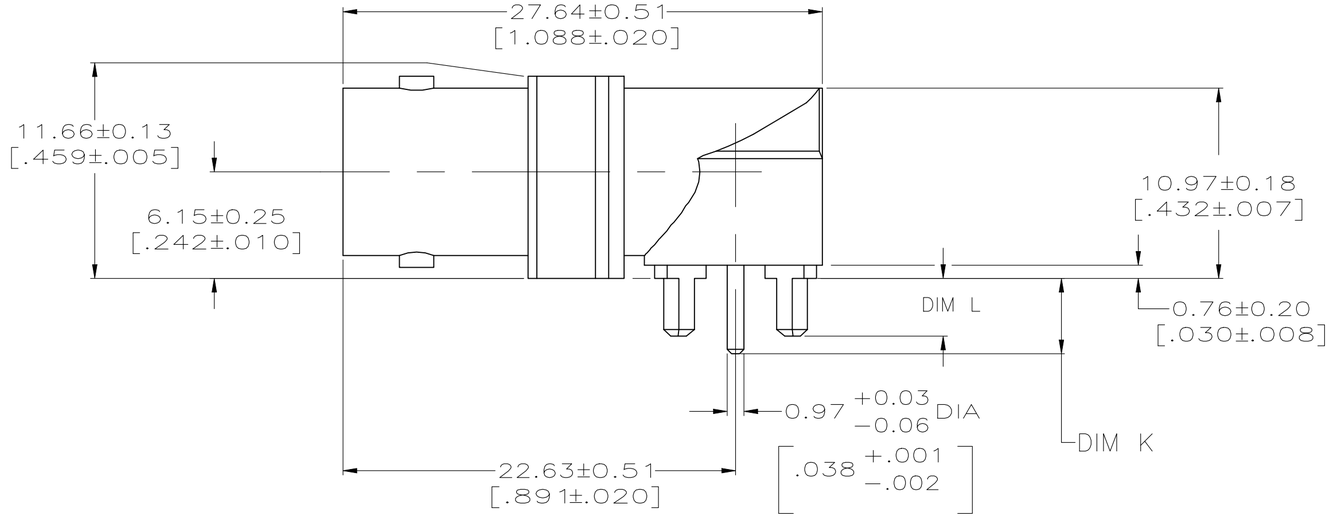

1. ZINC PER QQ-Z-363.
2. BERYLLIUM COPPER PER QQ-C-530.
3. PTFE PER MIL-P-19468.
4. TIN PLATE PER ASTM B 545, 3.81 μm [.000150] MIN THICK.
5. GOLD PLATE PER MIL-G-45204, 0.76 μm [.000030] MINIMUM THICK.
6. INTERFACE PER MIL-C-39012.
7. MODIFIED MAJOR DIAMETER TO 12.29 [.484].

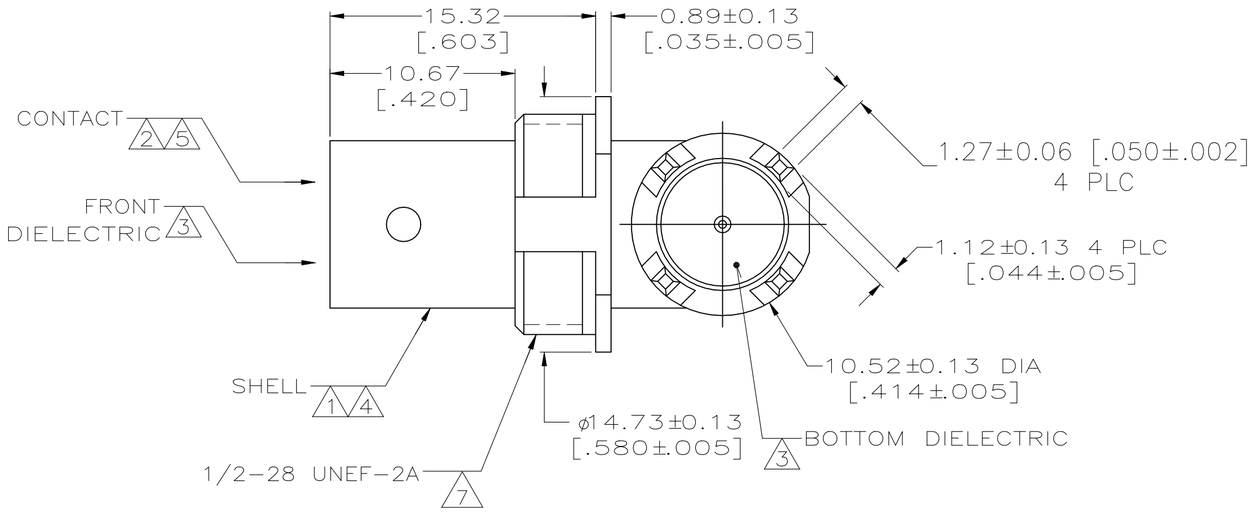

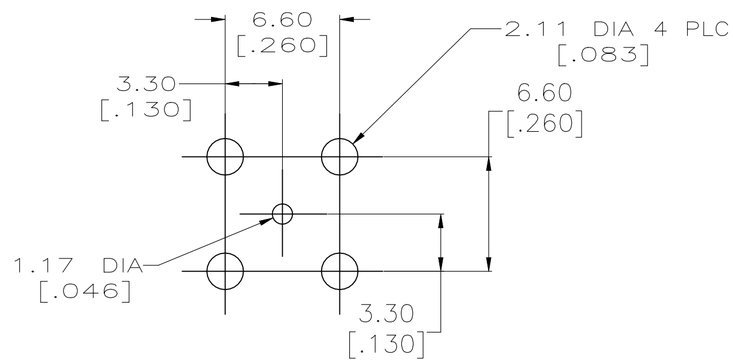

PCB CONFIGURATION

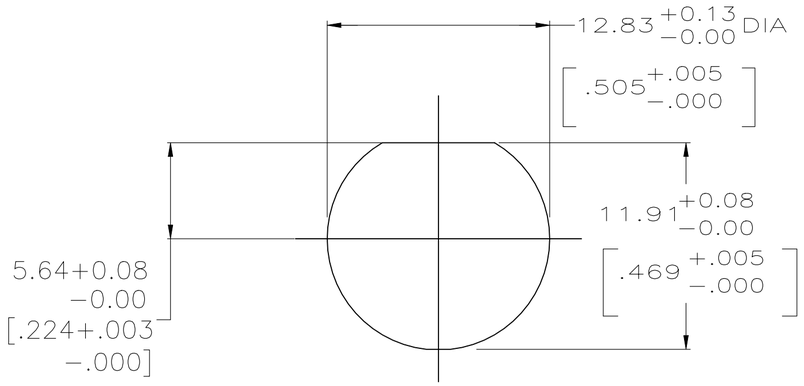

RECOMMENDED PANEL CUTOUT

OBSOLETE	4.34±0.38 [.171±.015]	4.34±0.38 [.171±.015]	6274425-4
OBSOLETE	2.44+0.00/0.23 [.096+.000−.009]	2.44+0.00/0.23 [.096+.000−.009]	6274425-3
	3.33±0.20 [.131±.008]	4.34±0.38 [.171±.015]	6274425-2
	DIM L	DIM K	PART NUMBER

THIS DRAWING IS A CONTROLLED DOCUMENT.

DIMENSIONS: mm [INCHES]

TOLERANCES UNLESS OTHERWISE SPECIFIED:
0 PLC ± –
1 PLC ± –
2 PLC ± 0.08 [.003]
3 PLC ± –
4 PLC ± –
ANGLES ± –

MATERIAL: SEE NOTES 1 – 4

FINISH: SEE NOTES 5, 6

DWN 02FEB2005 L. VARELA – DOCK5
CHK 02FEB2005 J. HAVENER
APVD 02FEB2005 J. LIPPERT
PRODUCT SPEC —
APPLICATION SPEC —
WEIGHT —

TE Connectivity

NAME: JACK, RIGHT ANGLE, 75 OHM, PCB, BNC

SIZE	CAGE CODE	DRAWING NO	RESTRICTED TO
A2	00779	C-6274425	—

CUSTOMER DRAWING | SCALE 4:1 | SHEET 1 OF 1 | REV B5

6274425

1471-9 (1/15)