THIS DRAWING IS UNPUBLISHED. RELEASED FOR PUBLICATION
© COPYRIGHT By - ALL RIGHTS RESERVED.

REVISIONS					
P	LTR	DESCRIPTION	DATE	DWN	APVD
	G	REVISED PER ECO-19-010465	09JUL2019	RS	SW

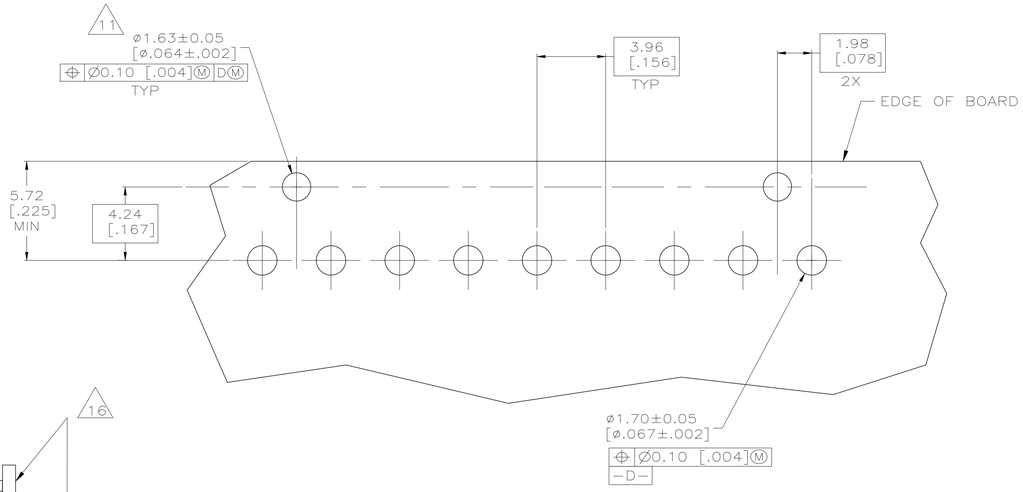

10 RECOMMENDED MOUNTING HOLE PATTERN FOR 1.57 [.062] THICK P.C. BOARD

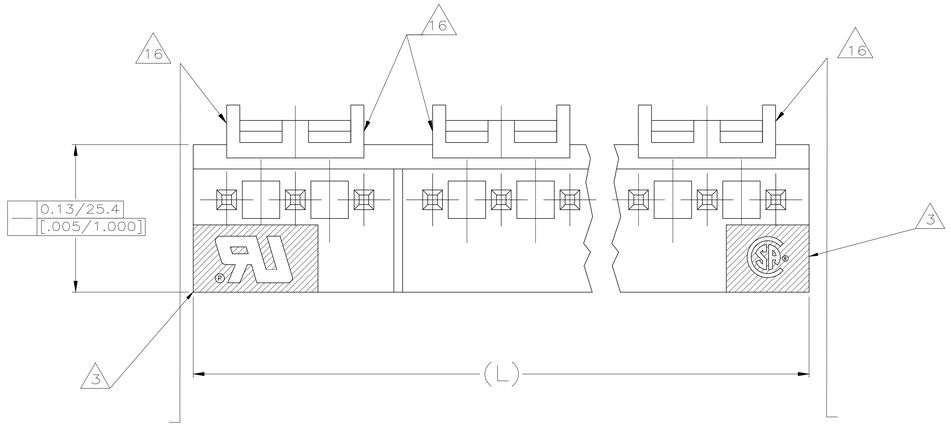

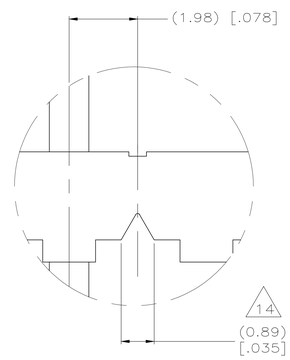

DETAIL C

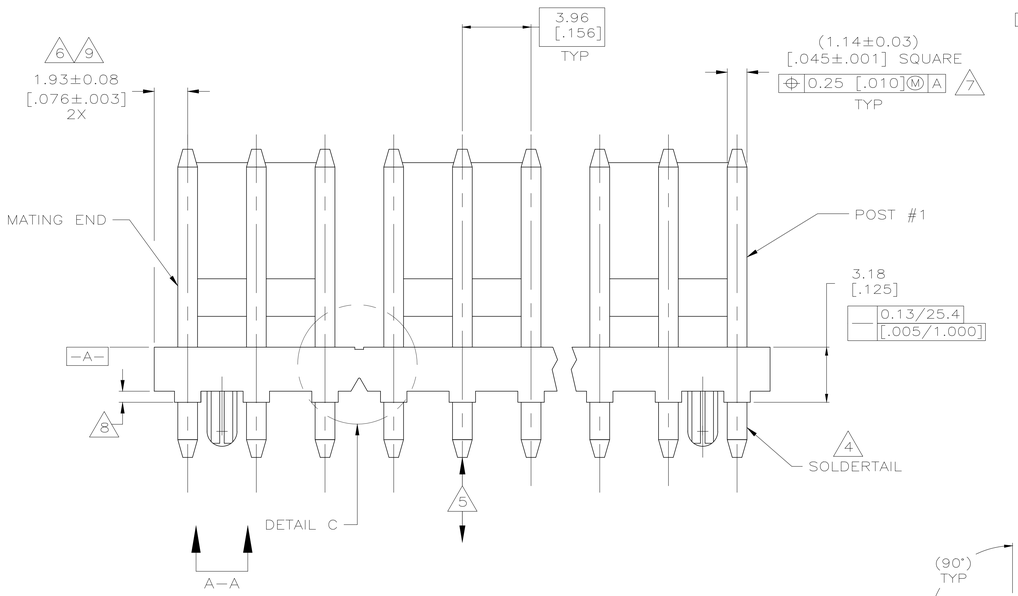

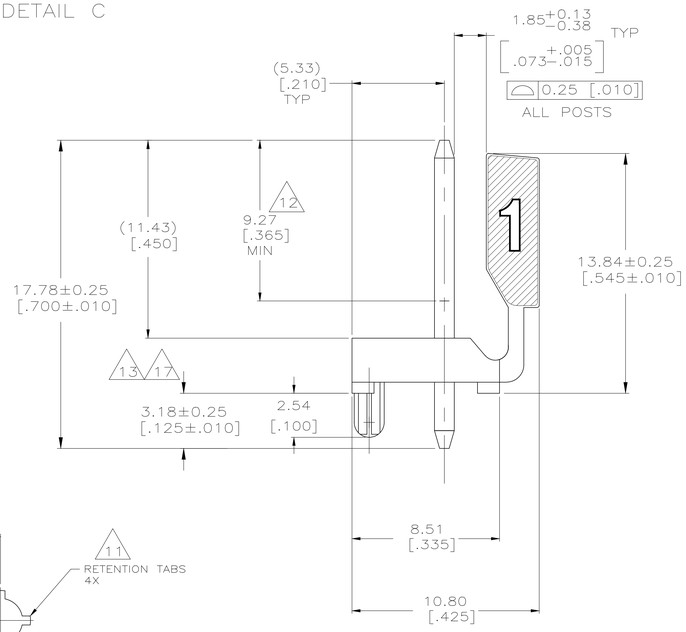

VIEW A-A
SCALE 16:1

1 MATERIAL
HOUSING: THERMOPLASTIC POLYESTER, GLASS FILLED, UL94V-0
POST: COPPER ALLOY

2 FINISH
HOUSING: NATURAL
POST: SEE NOTES 12, 13 & 17 FOR PLATING.

3 UL MARKING MAY NOT APPEAR ON THE 2 OR 3 POSITION SIZES. CSA MARKING MAY NOT APPEAR ON THE 2 POSITION SIZE.

4 POST SOLDERTAILS COMPLY WITH TYCO SOLDERABILITY SPECIFICATION 109-11-12.

5 POST WITHSTANDS 13.34 NEWTONS (3 LBS) MINIMUM AXIAL FORCE IN EITHER DIRECTION WITHOUT DISLODGING.

6 APPLIES AT -A-

7 APPLIES WHEN THE HEADER IS STRAIGHT.

8 PLASTIC PROJECTIONS PERMITTED IN THIS ZONE.

9 COORDINATE DIMENSIONS APPLIES FROM CENTER OF THE ACTUAL FEATURE.

10 SOLDER SIDE OF BOARD IS SHOWN.

11 THE RETENTION TABS PROVIDE A ONE-TIME INTERFERENCE FIT IN THE 1.63 [.064] DIAMETER BOARD HOLES FOR HEADER ASSEMBLY RETENTION DURING SOLDERING. FOUR TABS PER PEG, TWO PEGS PER HEADER ASSEMBLY (ONE PEG ONLY FOR 2 POSITION SIZE).

12 PLATING: GOLD PLATE AREA, 0.00076 [.000030] GOLD OR 0.00008 [.000003] MIN GOLD FLASH OVER 0.00068 [.000027] PALLADIUM NICKEL, PER TE CONNECTIVITY'S DISCRETION, ALL SIDES, OVER NICKEL UNDERPLATE, 0.00127 [.000050] MIN, ALL SIDES AND ENTIRE LENGTH OF POST.

13 PLATING: BRIGHT TIN-LEAD (93/7) PLATE AREA, 0.00381-0.00889 [.000150-.000350] THICK, ALL FOUR SIDES, OVER, 3.18 [.125] MINIMUM.

14 DIMENSIONS IN BRACKETS ARE IN INCHES.

15 ALL POSITION SIZES HAVE THE BACK WALL NOTCHED ON BOTH ENDS AS SHOWN. THE 2 THRU 5 POSITION SIZES HAVE SOLID BACK WALLS. POSITION SIZES 6 AND ABOVE HAVE AN INTERRUPTED BACK WALLS AT VARIOUS LOCATIONS (SEE TABLE FOR INTERRUPTION(S) LOCATIONS).

16 EDGE OF POLARIZING LOCK WALL TO BE IN LINE WITH CENTERLINE OF ADJACENT POST WITHIN ±0.13 [.005].

17 PLATING: MATTE TIN PLATE AREA, 0.00381-0.00889 [.000150-.000350] THICK, ALL FOUR SIDES, OVER, 3.18 [.125] MINIMUM.

BACK WALL INTERRUPTIONS BETWEEN POSTS	(L)	NO.OF POSN	ASSEMBLY
4&5 7&8 11&12 14&15	71.20 [2.803]	18	18 ~~4-644631-8~~
4&5 7&8 10&11 13&14	67.23 [2.647]	17	18 ~~4-644631-7~~
4&5 8&9 12&13	63.27 [2.491]	16	18 ~~4-644631-6~~
4&5 8&9 11&12	59.31 [2.335]	15	18 ~~4-644631-5~~
4&5 7&8 10&11	55.35 [2.179]	14	18 ~~4-644631-4~~
4&5 7&8 10&11	51.38 [2.023]	13	18 ~~4-644631-3~~
4&5 8&9	47.42 [1.867]	12	18 ~~4-644631-2~~
4&5 7&8	43.46 [1.711]	11	18 ~~4-644631-1~~
3&4 7&8	39.50 [1.555]	10	18 ~~4-644631-0~~
3&4 6&7	35.53 [1.399]	9	18 ~~3-644631-9~~
4&5	31.57 [1.243]	8	18 ~~3-644631-8~~
4&5	27.61 [1.087]	7	18 ~~3-644631-7~~
3&4	23.65 [.931]	6	18 ~~3-644631-6~~
NONE	19.69 [.775]	5	3-644631-5
NONE	15.72 [.619]	4	3-644631-4
NONE	11.76 [.463]	3	3-644631-3
NONE	7.80 [.307]	2	3-644631-2
4&5 7&8 11&12 14&15	71.20 [2.803]	18	18 ~~1-644631-8~~
4&5 7&8 10&11 13&14	67.23 [2.647]	17	18 ~~1-644631-7~~
4&5 8&9 12&13	63.27 [2.491]	16	18 ~~1-644631-6~~
4&5 8&9 11&12	59.31 [2.335]	15	18 ~~1-644631-5~~
4&5 7&8 10&11	55.35 [2.179]	14	18 ~~1-644631-4~~
4&5 7&8 10&11	51.38 [2.023]	13	18 ~~1-644631-3~~
4&5 8&9	47.42 [1.867]	12	18 ~~1-644631-2~~
4&5 7&8	43.46 [1.711]	11	18 ~~1-644631-1~~
3&4 7&8	39.50 [1.555]	10	18 ~~1-644631-0~~
3&4 6&7	35.53 [1.399]	9	18 ~~644631-9~~
4&5	31.57 [1.243]	8	18 ~~644631-8~~
4&5	27.61 [1.087]	7	18 ~~644631-7~~
3&4	23.65 [.931]	6	18 ~~644631-6~~
NONE	19.69 [.775]	5	18 ~~644631-5~~
NONE	15.72 [.619]	4	18 ~~644631-4~~
NONE	11.76 [.463]	3	18 ~~644631-3~~
NONE	7.80 [.307]	2	18 ~~644631-2~~

18 OBSOLETE PARTS: OBSOLETE CIS STREAMLINING PER D.RENAUD/D.SINISI

19 OBSOLETE PART NUMBERS

THIS DRAWING IS A CONTROLLED DOCUMENT.

DIMENSIONS: mm [INCHES]

TOLERANCES UNLESS OTHERWISE SPECIFIED: 0 PLC ± - ; 1 PLC ± ; 2 PLC ± 0.13 [.005] ; 3 PLC ± ; 4 PLC ± ; ANGLES ± -

MATERIAL 1 FINISH 2

DWN 25-FEB-2005 S. HOOVER
CHK 25-FEB-2005 D. BOSSI
APVD 25-FEB-2005 D. BOSSI
PRODUCT SPEC 108-1051
APPLICATION SPEC 114-1020
WEIGHT 0.000000

TE Connectivity

NAME - MTA .156 HDR ASM, STRGHT, STRGHT .045 SQ PST, .000030 AU PLTD, W/ RETENTION PEGS

SIZE A0 | CAGE CODE 00779 | DRAWING NO C-644631 | RESTRICTED TO —

CUSTOMER DRAWING | SCALE N/A | SHEET 1 OF 1 | REV G

4809 (1/15)