THIS DRAWING IS UNPUBLISHED. RELEASED FOR PUBLICATION -,- .
© COPYRIGHT - BY TYCO ELECTRONICS CORPORATION. ALL RIGHTS RESERVED.

LOC	DIST
H	—

REVISIONS

P	LTR	DESCRIPTION	DATE	DWN	APVD
	B	REVISED PER ECO-21-005270	07MAY2021	RZ	HL

P/N	PERF.LVL	CONTACT ASSIGNMENT	POS
OBSOLETE ~~8-1393755-3~~ 1393756-5	1 2	1 2 3 4 5 6 7 8 9 0 1 2 3 4 5 6 7 8 9 0 1 2 3 4 5 6 7 8 9 0 1 2 z + + + + + + + + + + + + + + + + b + + + + + + + + + + + + + + + + d + + + + + + + + + + + + + + + + f + + + + + + + + + + + + + + + + + CONTACT	64

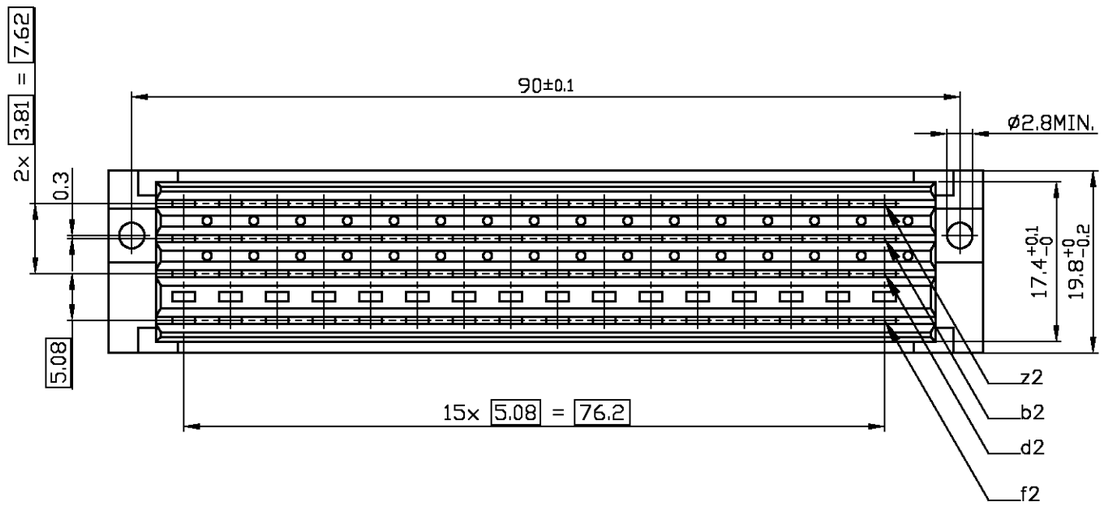

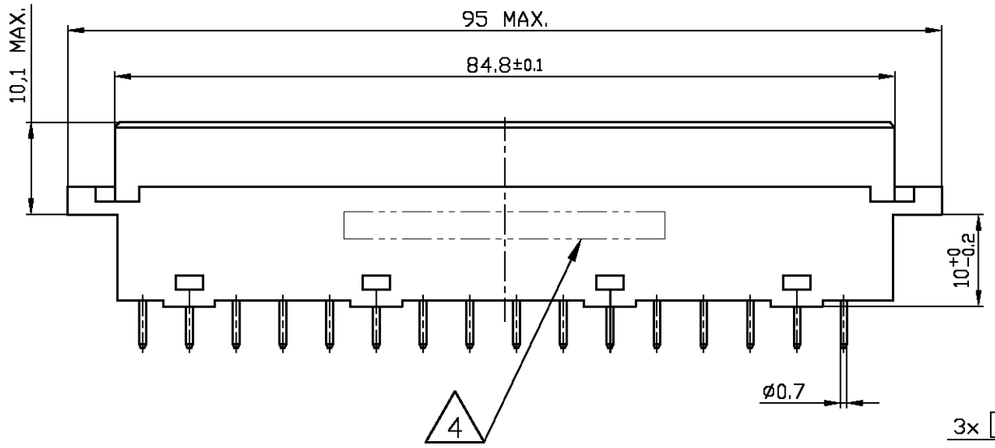

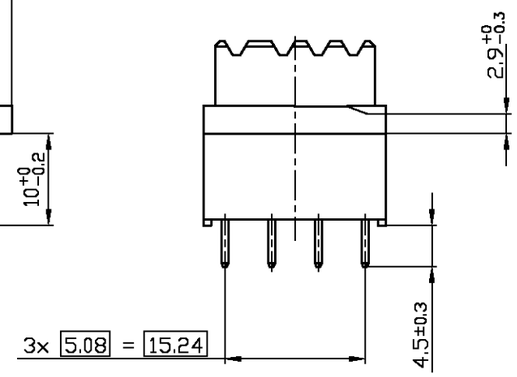

NOTES:

1. HOUSING: GLASS FILLED THERMOPLASTIC UL 94 V-0 RATED; GREY
2. CONTACTS: COPPER ALLOY
3. PLATING:
   CONTACT AREA: PERFORMANCE LEVEL 1 OR 2 (SEE TABLE) ACCORDING TO DIN 41612 AND EN 60603-2, TYPE G
   SOLDERING AREA: 3-7µm TIN OVER 0,8µm NICKEL
4. CONNECTOR IS PRINTED WITH PARTNUMBER AND DATECODE

THIS DRAWING IS A CONTROLLED DOCUMENT.

DIMENSIONS: mm

TOLERANCES UNLESS OTHERWISE SPECIFIED:
0 PLC ± -
1 PLC ± -
2 PLC ± -
3 PLC ± -
4 PLC ± -
ANGLES ± -

MATERIAL -
FINISH -

DWN	J.van Hoek	19DEC2007
CHK	B.Mooij	19DEC2007
APVD	J.Broeksteeg	19DEC2007
PRODUCT SPEC	—	
APPLICATION SPEC	—	
WEIGHT	—	

CUSTOMER DRAWING

Tyco Electronics
Tyco Electronics Corporation
's-Hertogenbosch, Nederland

NAME
EUROCARD FEMALE CONNECTOR TYPE G
64 POS. STRAIGHT

SIZE	CAGE CODE	DRAWING NO	RESTRICTED TO
A3	00779	C-8-1393755-3	—

SCALE	SHEET	REV
1:1	1 OF 1	B