DRAWING MADE IN KOREAN PROJECTION

DIMENSIONS IN ~~INCHES~~ . MM

CUSTOMER DRAWING

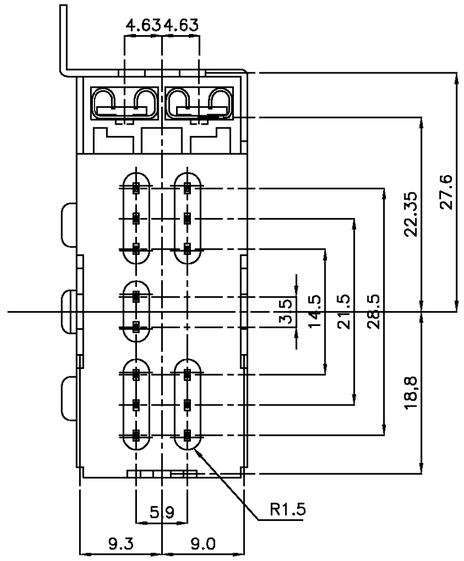

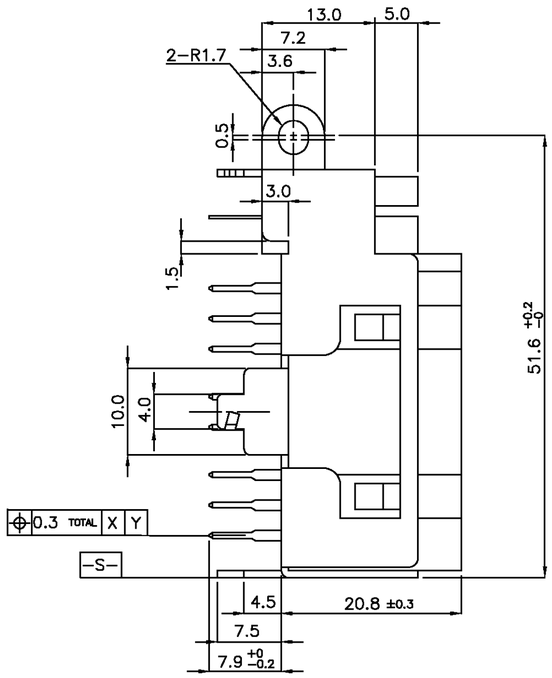

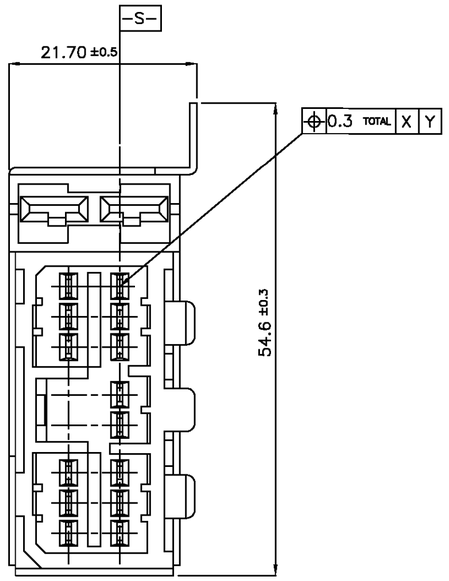

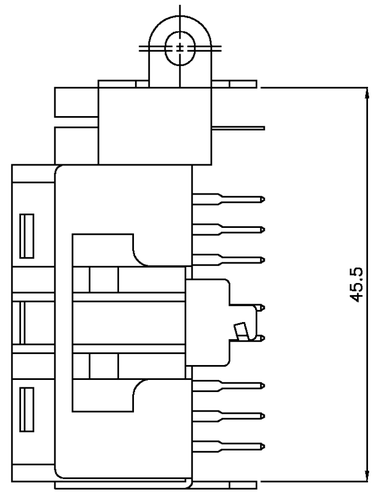

P.C BOARD DIMENSION

NOTE:
1.BOARD THK : 1.6±0.15
2. TOLERANCE : ±0.1

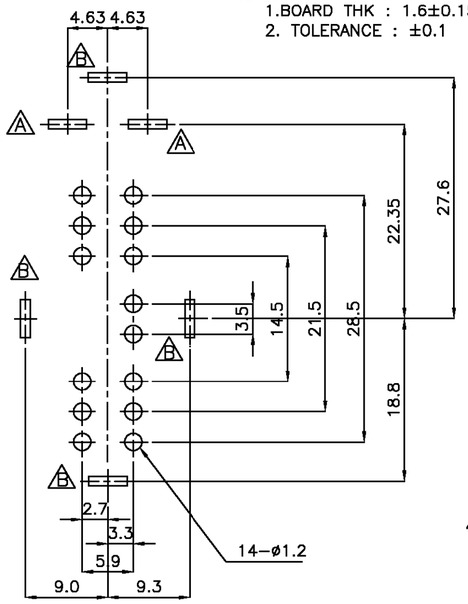

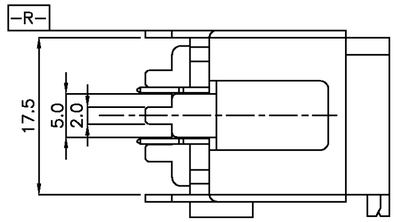

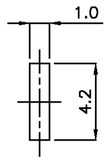

B 4 POSITION
S(4/1)

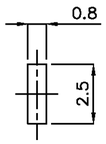

A 2 POSITION
S(4/1)

NOTE:
1.MATERIAL : PLASTIC : P.B.T
BRAKET : STC(0.8T)
TERMINAL : BRASS
2. FINISH : TIN-PLATING
3. COUSTOMER PART NUMBER : H550(H405)
4. HOUSING COLOR

BLACK	85140-2
NATURAL	85140-1
HOUSING COLOR	PART NO

5. TAB ALIGNMENT : ±30'
6. AVOID ANY GAP BETWEEN HSG
AND METAL SHELL AFTER ASSEMBLY

LTR	REVISION RECORD	DR	CHK	DATE
A	REVISED(ECN PER ME95-)	JC	BM	
O	RELEASED	JW	BM	'95 07/10

© 1995 AMP MFG KOREA
ALL RIGHT RESERVED AMP PRODUCTS COVERED BY PATENTS
AND OR PATENTS PENDING

AMP MFG KOREA

WIRE RANGE	INSULATION DIA
MATERIAL: SEE NOTE	FINISH/COLOR: SEE NOTE
DR	APP
CHK	REL

NAME: COMBI CONNECTOR "V" 14P ASS'Y

TOLERANCES
0<XXX<10 ±0.2
10<XXX<30 ±0.25
30<XXX<100±0.3
ANGLES ±3°

SIZE	LOC	NUMBER
A2	DS	85140

SCALE	REV	SHEET
2/1	A	1/1

PRINT DIST.