THIS DRAWING IS UNPUBLISHED. RELEASED FOR PUBLICATION 2008
© COPYRIGHT 2008 BY TYCO ELECTRONICS CORPORATION. ALL RIGHTS RESERVED.

LOC	DIST
A1	-

REVISIONS

P	LTR	DESCRIPTION	DATE	DWN	APVD
	C	2. Kontaktsicherung hinzu	4DEC1987	Dra.	-
	D	2. Kontaktsicherung entfällt	5AUG1988	Schw.	-
	D1	925379-2 OBSOLETE	29JUL2004	Haas	Stre.
	E	DRAWING UPDATED	12JAN2009	Haas	Stre.

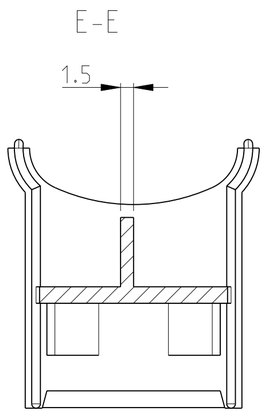

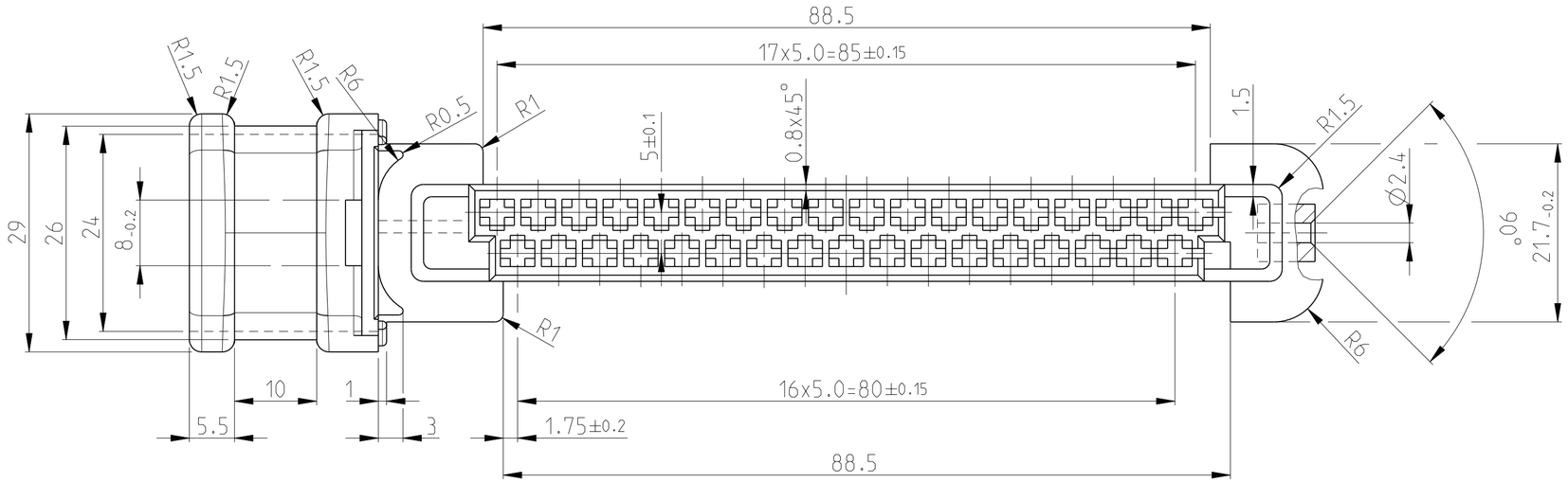

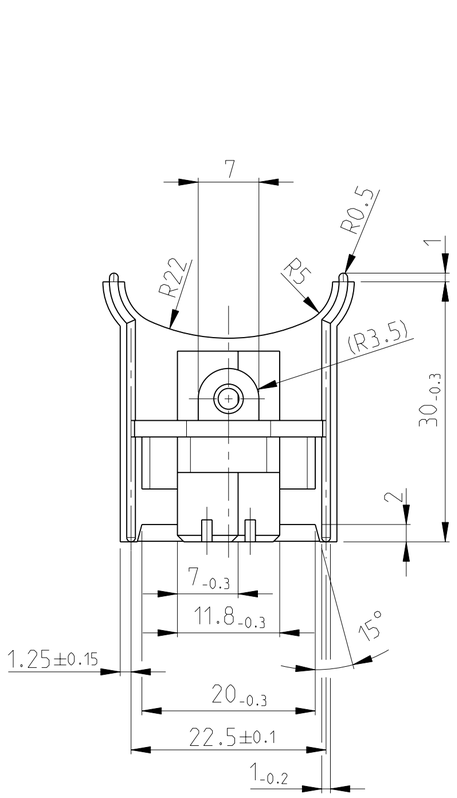

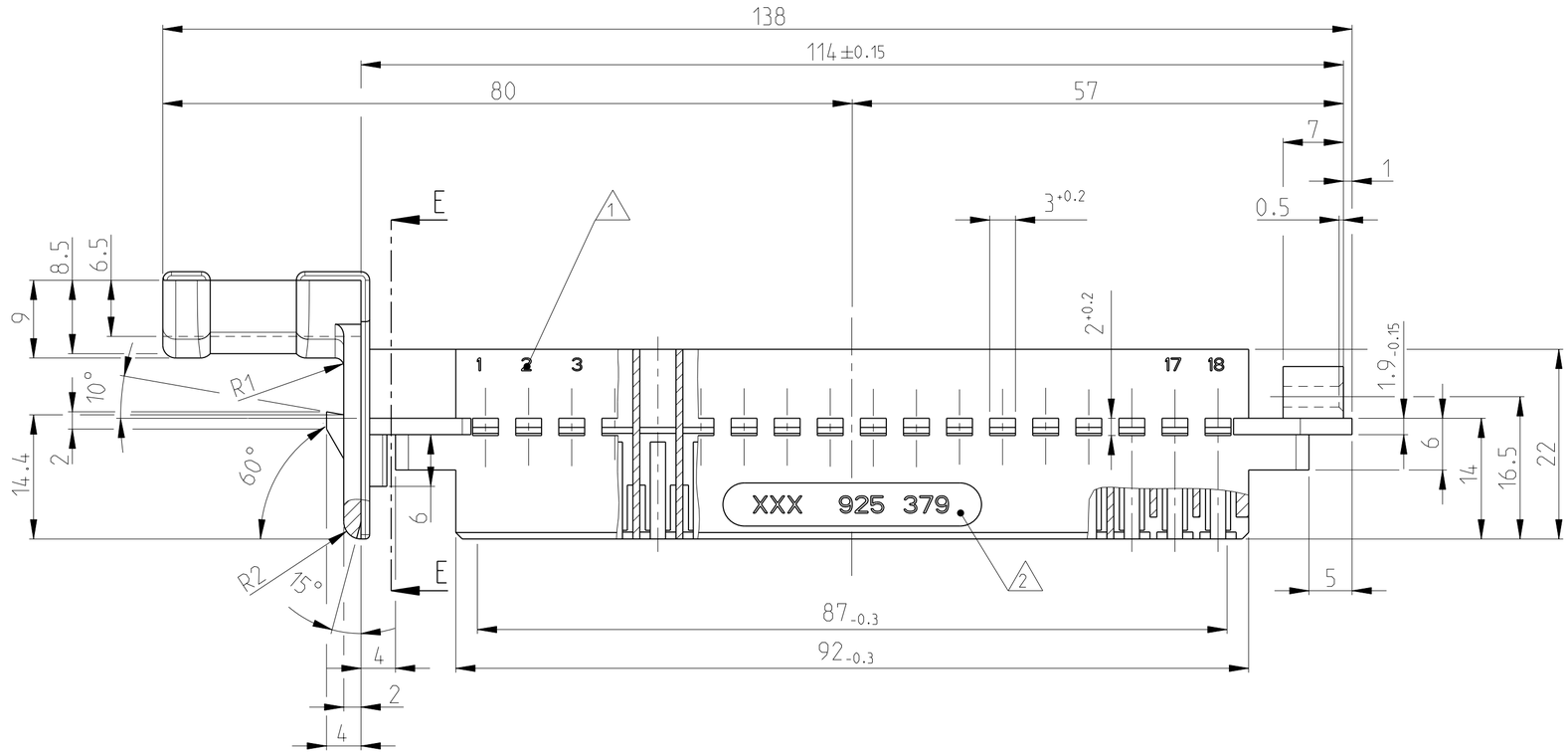

NOTES
Bemerkungen

1. 2 CHARS RAISED 0.3
2. 2 CHARS RAISED 0.2 WITHIN RECESS OF 0.3

	PART NUMBER	MATERIAL	COLOR	REV
OBSOLETE	~~925379-2~~	~~POLYAMID 6.6 GV35 ULTRAMID A3XG7~~	~~BLACK~~	~~E~~
	925379-1	POLYAMID 6.6 GV13	BLACK	E

THIS DRAWING IS A CONTROLLED DOCUMENT FOR TYCO ELECTRONICS CORPORATION. IT IS SUBJECT TO CHANGE AND THE CONTROLLING ENGINEERING ORGANIZATION SHOULD BE CONTACTED FOR THE LATEST REVISION.

DIMENSIONS: mm

TOLERANCES UNLESS OTHERWISE SPECIFIED:
0 PLC ±-
1 PLC ±-
2 PLC ±-
3 PLC ±-
4 PLC ±-
ANGLES ±-°

MATERIAL: SEE TABLE
FINISH: -

DWN	Haß	29APR1975
CHK	Stredak, F.	12JAN2009
APVD	Bleicher,M.	12JAN2009
PRODUCT SPEC	-	
APPLICATION SPEC	-	
WEIGHT	-	

Tyco Electronics
Tyco Electronics AMP GmbH
64625 Bensheim (Germany)

NAME: 35pol. Junior-Timer Gehaeuse
35POS. HOUSING FOR JUNIOR-TIMER CONT.

SIZE	CAGE CODE	DRAWING NO	RESTRICTED TO
A2	00779	C-925379	-

CUSTOMER DRAWING | SCALE 2:1 | SHEET 1 OF 1 | REV E

AMP 1471-9 REV 31MAR2000

Pro/ENGINEER DRAWING