THIS DRAWING IS A CONTROLLED DOCUMENT
DRAWING NO AU29463

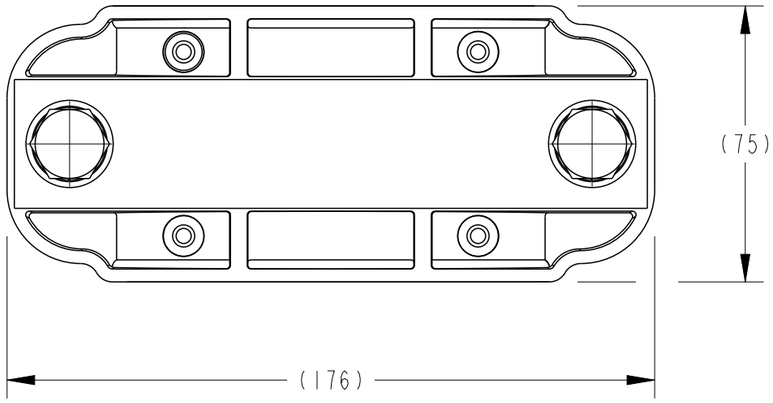

PART NO.	CATALOGUE NO.
EF8408-000	CC80-92-SN-M12
EF8410-000	CC92-106-SN-M12

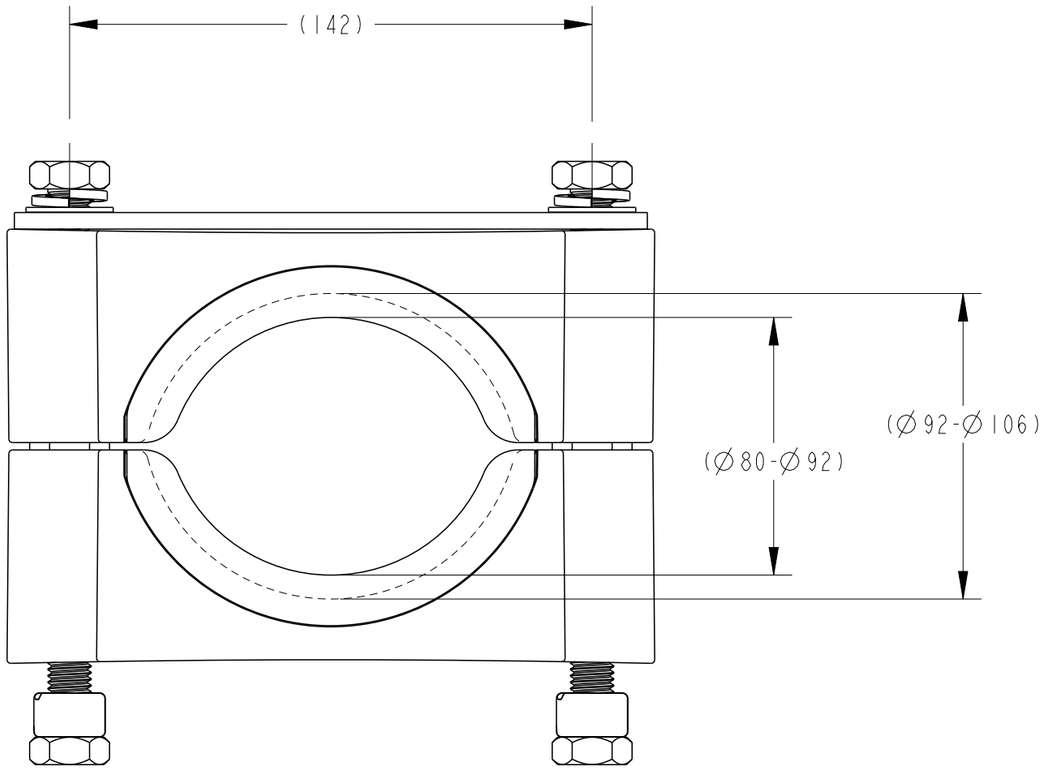

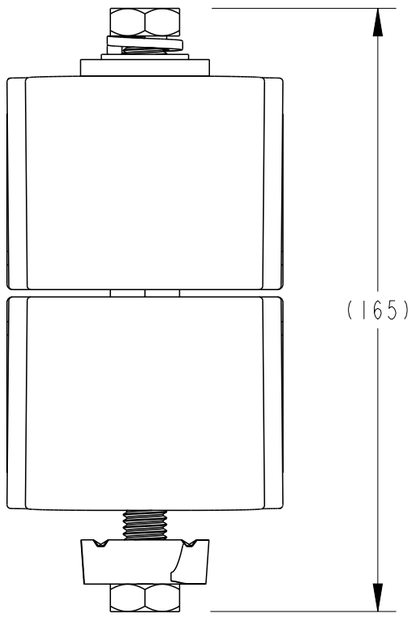

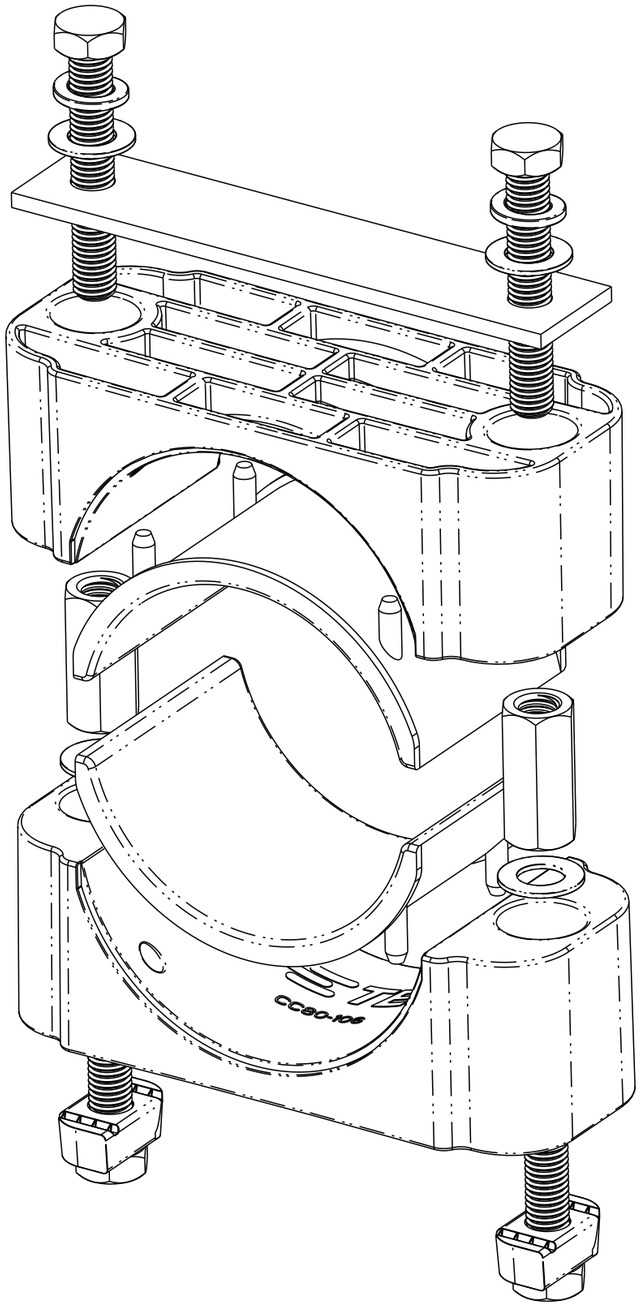

POS	REV	REVISION RECORD	DATE	DWN	APVD
—	1	NEW RELEASE	22-09-2014	RN	AT

LOC
DIST

IMPLIED NOTES
BURRS AND SHARP EDGES REMOVED
SCREW THREADS ARE TO AS 1275
DO NOT WORK TO DIMS MARKED REF
SURFACE FINISH 6.3 U.N.O.
DIMS ARE IN mm. DO NOT SCALE

IMPLIED TOLERANCES
HOLE DIA AND LOCATIONS..±0.5mm
DIMENSIONS UP TO 30mm...±1.5mm
DIMENSIONS OVER 30mm....±5%
UP TO A MAX OF.....±5mm
ANGULAR DIMENSIONS.....±5°

TCPN: REFER TABLE
PART Alias UTX/DUL: CC80-106-SN-M12
Cat No: REFER TABLE

TITLE: CABLE CLEAT Ø80-Ø92 AND Ø92-Ø106 STRUT NUT

DRAWN: RN | DATE: 22-09-2014
CHECKED: RN | APPROVED: AT

TE Connectivity
2/3 Corella Close
Berkeley Vale NSW 2261 Australia

MATERIAL DESC: -
MATERIAL NO: - | MATL SPEC/STD/DRG NO: - | PROCESS SPEC HEAT TREAT/PLATING NO:

SIZE: A3 | PROJECTION: 3RD ANGLE | SCALE: 3:5 | DRAWING NO: AU29463 | SHEET 1 OF 1 | REV 1

Format: generic_ma3_au_rl.frm
Template: tec_generic_a3_metric_au_rl.drw
Dwg No from Pt Mod Fam Tbl: 2 AU29463

THIS INFORMATION IS CONFIDENTIAL AND PROPRIETARY TO TE CONNECTIVITY CORPORATION AND ITS WORLDWIDE SUBSIDIARIES AND AFFILIATES. IT MAY NOT BE DISCLOSED TO ANYONE, OTHER THAN TE CONNECTIVITY PERSONNEL, WITHOUT WRITTEN AUTHORIZATION FROM TE CONNECTIVITY CORPORATION, AUSTRALIA.