CATALOGUE NUMBER: NAA2360-2480
SUITS CONDUCTOR

ARMOUR RODS

STRANDING	COND. TYPE	DIAMETER	FITTING LAY
19/4.75	AAC/AAAC	23.75	RIGHT HAND
30/7/3.50	ASCR	24.50	RIGHT HAND

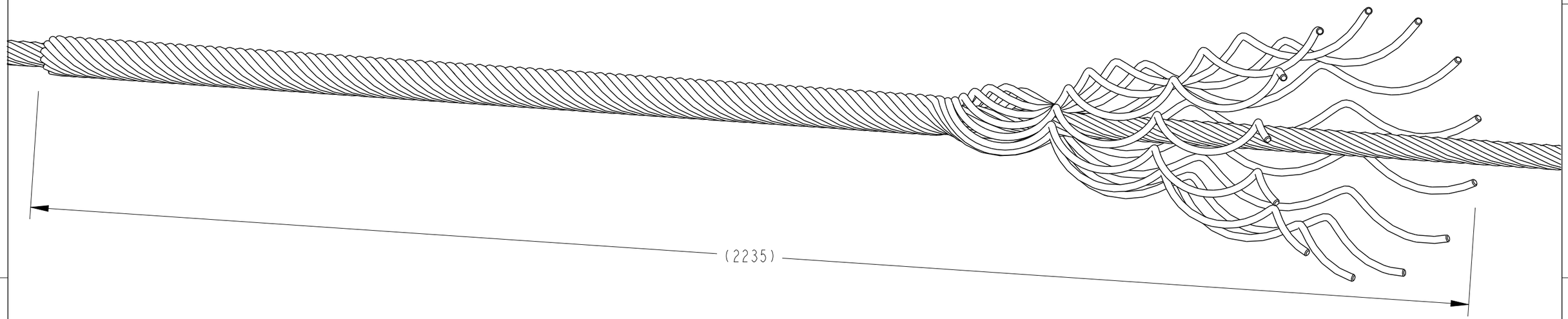

TECHNICAL SPECIFICATIONS;

CATALOGUE NUMBER: NAA2360-2480
DESCRIPTION: NON-TENSION ALUMINIUM ARMOUR RODS (NAA) FITTING
MATERIAL: ALUMINIUM ALLOY
NUMBER OF RODS: 13
ROD DIAMETER: 6.40mm
OVERAL LENGTH: 2235mm
END FINISH: BALLENDED
FITTING LAY DIRECTION: RIGHT HAND
COLOUR CODED: PURPLE / BLUE
RODS ARE LABELED, BUNDLED IN A SET AND TAPED AT BOTH ENDS.

PRODUCT LABEL

NAA2360-2480
19/4.75 AAC/AAAC
30/7/3.50 ASCR

WEIGHT: 2.70kg
BATCH NO: ---------
MONTH/YEAR: ---------

BOX LABEL

P/N: NAA2360-2480
ID:
DESCRIPTION:
NON-TENSION ALUMINIUM ARMOUR RODS (NAA) FITTING
19/4.75 AAC/AAAC
30/7/3.50 ASCR
RANGE: 23.60 - 24.80
COLOUR-CODE: PURPLE / BLUE
QTY: 5 WEIGHT: ----- BATCH: ------

POS	REV	REVISION RECORD	DATE	DWN	APVD
—	1	NEW RELEASE	02-05-2013	RN	AT

IMPLIED NOTES
BURRS AND SHARP EDGES REMOVED
SCREW THREADS ARE TO AS 1275
DO NOT WORK TO DIMS MARKED REF
SURFACE FINISH 6.3 U.N.O.
DIMS ARE IN mm. DO NOT SCALE

IMPLIED TOLERANCES
HOLE DIA AND LOCATIONS..±0.5mm.
DIMENSIONS UP TO 30mm...±1.5mm.
DIMENSIONS OVER 30mm...±5%.
UP TO A MAX OF.....±5mm.
ANGULAR DIMENSIONS.....±5°.

TCPN -
PART Alias UTX/DUL NAA2360-2480
Cat No NAA2360-2480
MATERIAL DESC ALUMINIUM ALLOY
MATERIAL NO -
MATL SPEC/STD/DRG NO -
PROCESS SPEC HEAT TREAT/PLATING NO

TITLE NON-TENSION ALUMINIUM ARMOUR RODS (NAA) FITTING
COND.RANGE: Ø23.60-Ø24.80 19/4.75 AAC/AAAC 30/7/3.50 ASCR

DRAWN RN | DATE 02-05-2013 | CHECKED MN | APPROVED AT

TE Connectivity
2/3 Corella Close
Berkeley Vale NSW 2261 Australia

SIZE A3 | PROJECTION 3RD ANGLE | SCALE NTS | DRAWING NO NAA2360-2480-C | SHEET 1 OF 1 | REV 1

Format: generic_ma3_au_rl.frm
Template: tec_generic_a3_metric_au_rl.drw
Dwg No from Pt Mod Fam Tbl: >AUXXXXX

THIS DRAWING IS A CONTROLLED DOCUMENT
DRAWING NO NAA2360-2480-C
THIS INFORMATION IS CONFIDENTIAL AND PROPRIETARY TO TE CONNECTIVITY CORPORATION AND ITS WORLDWIDE SUBSIDIARIES AND AFFILIATES. IT MAY NOT BE DISCLOSED TO ANYONE, OTHER THAN TE CONNECTIVITY PERSONNEL, WITHOUT WRITTEN AUTHORIZATION FROM TE CONNECTIVITY CORPORATION, AUSTRALIA.