© 2021 TE Connectivity. All Rights Reserved.

| REVISIONS | | | | | |
|---|---|---|---|---|---|
| P | LTR | DESCRIPTION | DATE | DWN | APVD |
| | A | INITIAL RELEASE | 23MAR2021 | VG | NA |

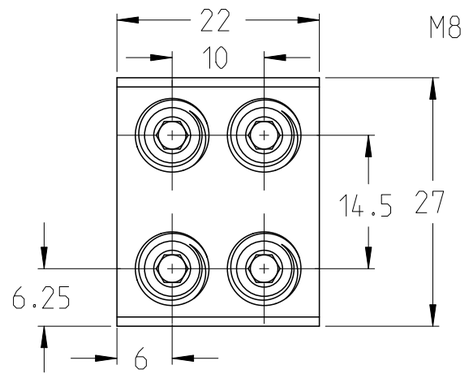


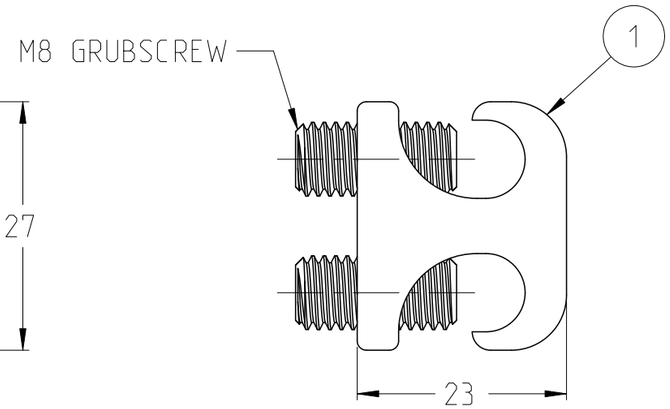


SHROUDS NOT SHOWN

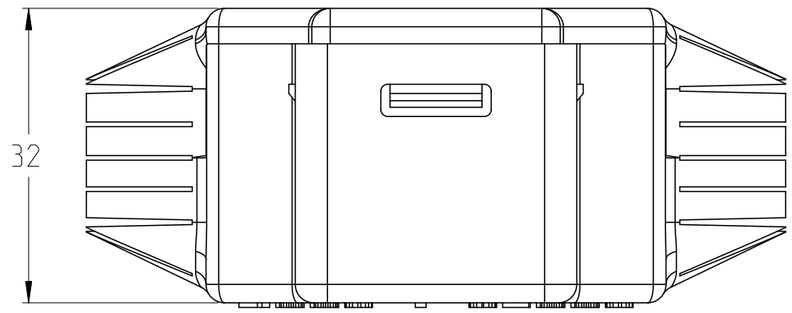


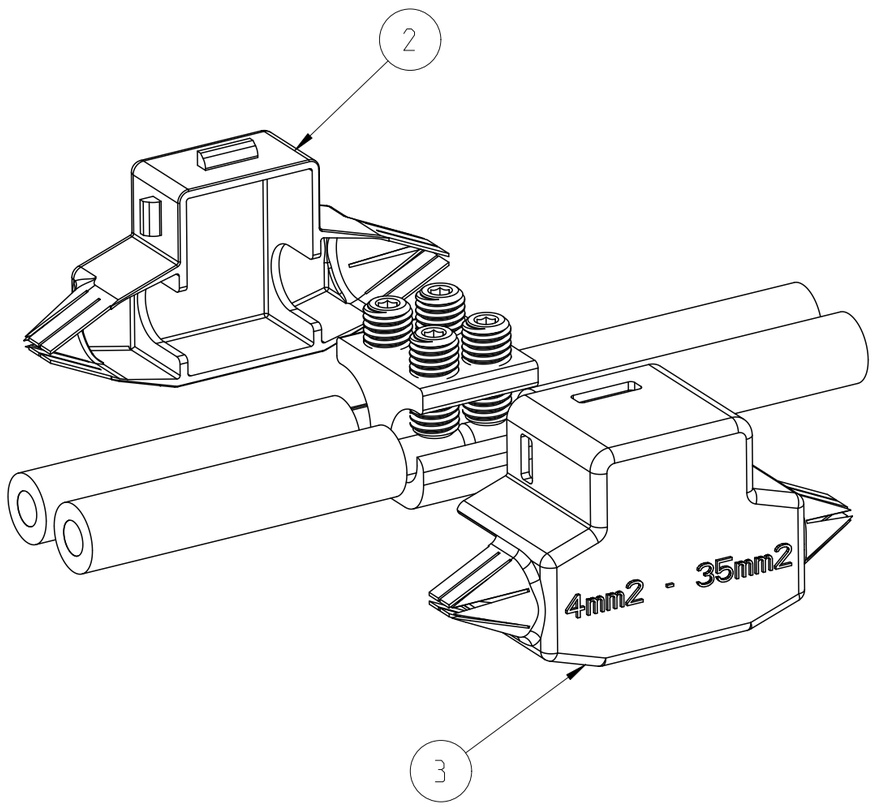


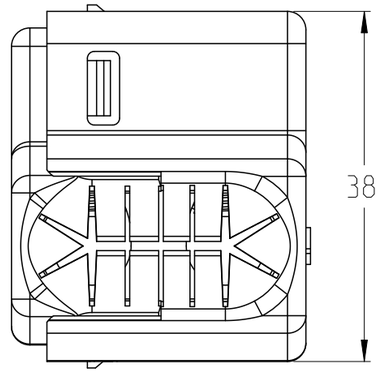


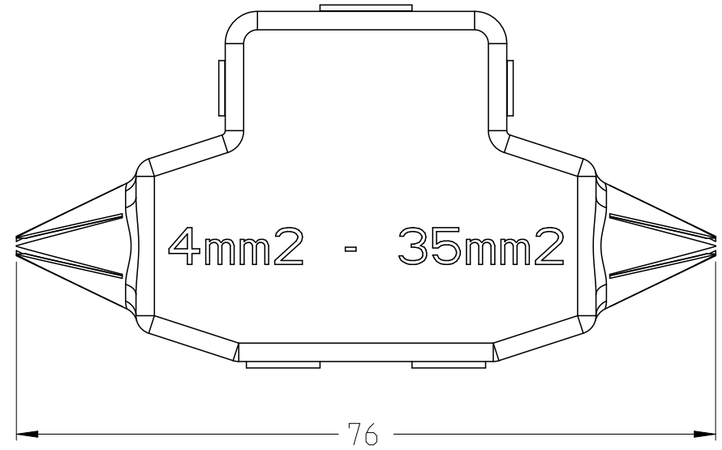


| TCPN | PN | REFERENCE | CONDUCTOR RANGE ($mm^2$) | STD GRUBSCREW SIZE |
|---|---|---|---|---|
| CH5421-000 | BAH-031000010 | ANC35INS | 4-35 | M8 |

| ITEM | QTY | PART NUMBER | DESCRIPTION |
|---|---|---|---|
| 3 | 1 | CU2404-000 | ANC35 INSULATION SHROUD - OUTER |
| 2 | 1 | CU2405-000 | ANC35 INSULATION SHROUD - INNER |
| 1 | 1 | 943590-000 | 35mm² BRASS ANCHOR TYPE SERVICE CONNECTOR 22.0 LONG |

THIS DRAWING IS A CONTROLLED DOCUMENT.

DIMENSIONS: mm

TOLERANCES UNLESS OTHERWISE SPECIFIED:
0 PLC ±
1 PLC ±
2 PLC ±
3 PLC ±
4 PLC ±
ANGLES ±

MATERIAL

FINISH –

DWN VENKATESH G 23MAR2021
CHK L.JONATHAN 23MAR2021
APVD N.ALMEIDA 23MAR2021
PRODUCT SPEC –
APPLICATION SPEC –
WEIGHT –

TE Connectivity

NAME BRANCH CONNECTOR WITH MOULDED INSULATION SHROUDS FOR SERVICE CONDUCTORS BAH-031000010

| SIZE | CAGE CODE | DRAWING NO | RESTRICTED TO |
|---|---|---|---|
| A3 | 00779 | C-BAH-031000010 | – |

CUSTOMER DRAWING | SCALE 3:2 | SHEET 1 OF 1 | REV A

1470-19 (3/13)