DRAWING NO
P8120

3RD ANGLE PROJECTION

REMOVE ALL SHARP EDGES AND BURRS

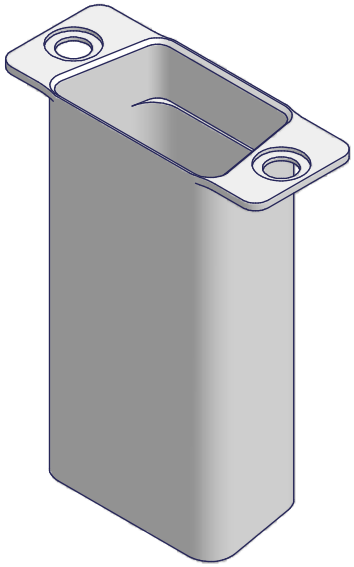

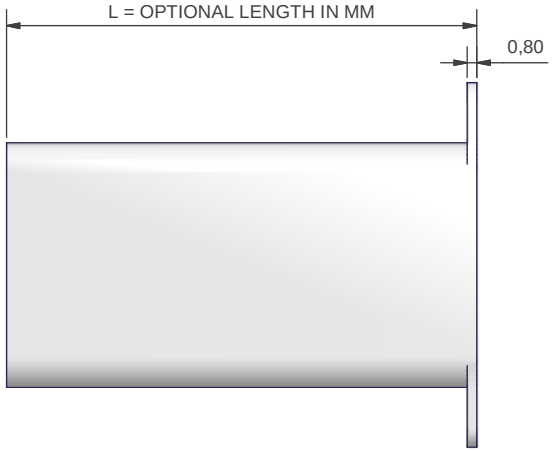

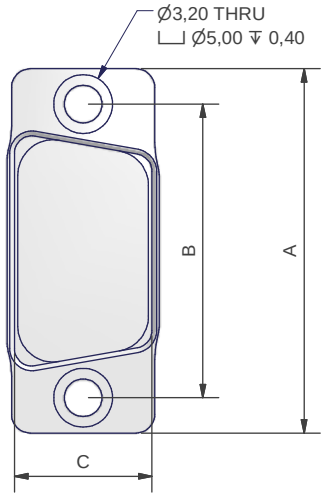

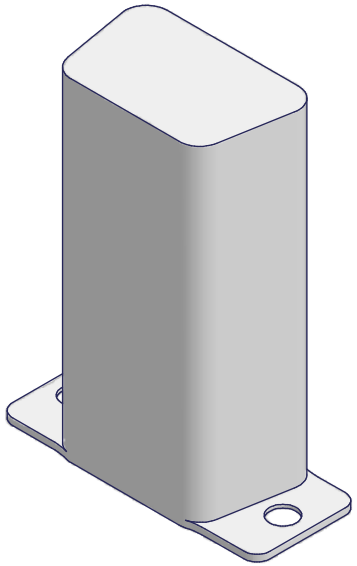

TABLE 1					
SHELL SIZE	A	B	C +0,2/-0	D	E
09	31,00	25,00	11,7	12,2	12,93
15	39,20	33,33	11,7	12,2	12,93
25	53,00	47,02	11,7	12,2	12,93
37	69,50	63,50	11,7	12,2	12,93
50	66,90	61,12	14,5	15,2	15,75

TABLE 3	
PLATING	
B	CADMIUM OLIVE DRAB OVER ELECTROLESS NICKEL
C	ELECTROLESS NICKEL
CHP	HIGH PHOSPHOR ELECTROLESS NICKEL TO BS EN ISO 4527:2003
U	UNPLATED
Y	YELLOW CHROMATE OVER CADMIUM

EXAMPLE PART NUMBER: 100P2314-09-L40-CHP	
100P2314 =	POLAMCO SERIES
09 =	SHELL SIZE
L40 =	LENGTH IN MM (MIN L10 - 5MM INCREMENTS)
CHP =	PLATING/FINISH

ISSUE	DCR NO.	DATE	APPROVED
2	4965	18/09/2012	W.RUST

MATERIAL

ALUM ALLOY 6082-T6

UNLESS OTHERWISE SPECIFIED
ALL DIMENSIONS IN MILLIMETRES
TOLERANCE ON DIMENSIONS +/-0.1MM
TOLERANCE ON ANGLES +/- 1 DEGREE

WEIGHT

DRAWN M.PAUL

DO NOT SCALE THIS DRAWING

THIS DRAWING IS COPYRIGHT, AND THE PROPERTY OF POLAMCO LTD. IT MUST NOT BE COPIED, USED FOR MANUFACTURE OR OTHERWISE DISCLOSED WITHOUT PRIOR WRITTEN CONSENT OF THE COMPANY.

POLAMCO LTD
WESTON LOCK
LOWER BRISTOL ROAD
BATH BA2 1EP

TITLE

D SUB BLANKING CAN

PART NO 100P2314-**-L**-CHP

ASSY USED ON
MIL-DTL-24308,
ESCC-3401/002 EXCLUDING SIZE 104

DRAWING NO P8120