© 2021 TE Connectivity. All Rights Reserved.

REVISIONS					
P	LTR	DESCRIPTION	DATE	DWN	APVD
	A	INITIAL RELEASE	14SEP2021	GK	DB

LABEL AND LINER DESIGN

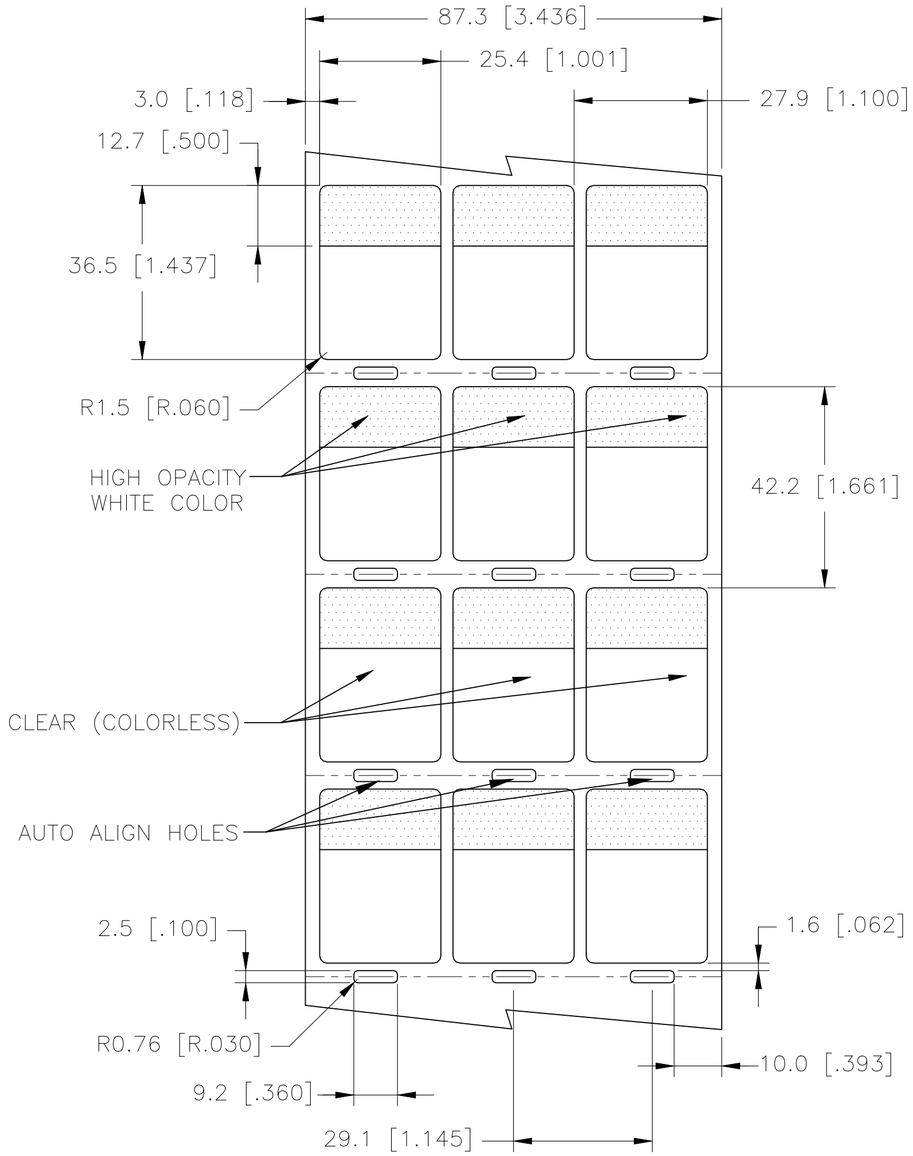

PRESENTATION

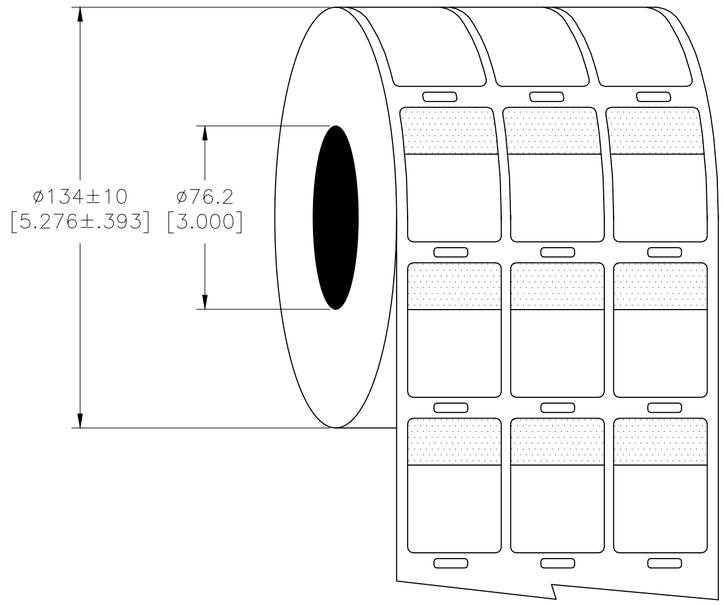

All dimensions in mm [Inches]

TE PN: A27037-000

OUTSIDE WOUND
LABEL ACROSS: 3
PER ROLL QTY: 5000

MATERIAL	PVF CLEAR TEDLAR®
ADHESIVE TYPE	PERMANENT ACRYLIC
LINEAR	WHITE KRAFT

TOLERANCES mm [INCH]	
LABEL HEIGHT:	±0.3 [.012]
LABEL WIDTH:	±0.3 [.012]
WEB WIDTH:	±0.8 [.031]
VERTICAL REPEAT:	±0.8 [.031]*
HORIZONTAL REPEAT:	±0.8 [.031]*
PRINT POSITIONING:	±0.8 [.031]*
LEFT MARGIN:	±0.4 [.016]
QUANTITY:	−0 % +2 %
*NON ACCUMULATING	

THIS DRAWING IS A CONTROLLED DOCUMENT.

DIMENSIONS: mm [INCHES]

TOLERANCES UNLESS OTHERWISE SPECIFIED:
0 PLC ±
1 PLC ± −
2 PLC ± −
3 PLC ± −
4 PLC ± −
ANGLES ± −

MATERIAL: SEE TABLE
FINISH: GLOSSY

DWN 14SEP2021 GOPALAKRISHNA HV
CHK 14SEP2021 D.BURGAT
APVD 14SEP2021 D.BURGAT
PRODUCT SPEC TTDS−111
APPLICATION SPEC —
WEIGHT 0.062g

TE Connectivity

NAME: PVF CLEAR TEDLAR® SELF LAMINATING LABEL
WHITE − 3 ACROSS
25.4mm x 36.5mm [1inch x 1.43inch]

SIZE	CAGE CODE	DRAWING NO	RESTRICTED TO
A2	FB1U7	PVF100143WE5	—

CUSTOMER DRAWING | SCALE NTS | SHEET 1 OF 1 | REV A

PVF100143WE5

1471−9 (1/15)