THIS DRAWING IS UNPUBLISHED. RELEASED FOR PUBLICATION 20
© COPYRIGHT 20 BY - ALL RIGHTS RESERVED.

REVISIONS

P	LTR	DESCRIPTION	DATE	DWN	APVD
	B2	ECR-19-006656	06MAY2019	CD	CW
	C	ECR-19-017242	29FEB2020	BS	CW
	D	ECR-20-007103	31JUL2020	KW	CW
	E	ECR-20-015244	27MAY2021	BS	CW

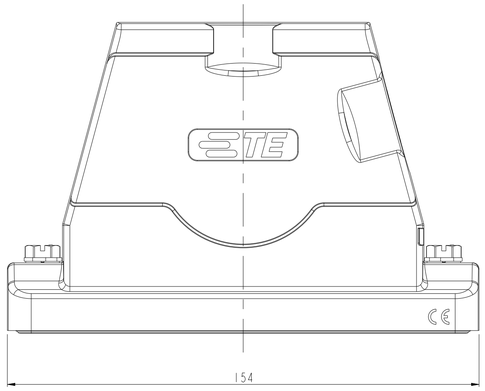

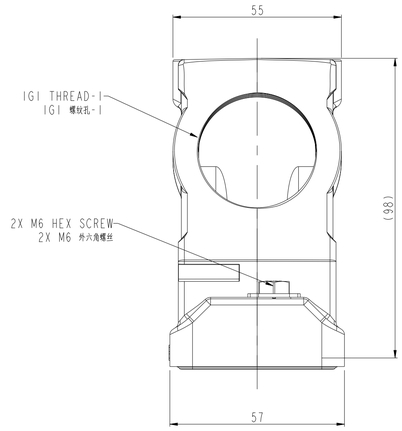

NOTES:

1. TECHNICAL CHARACTERISTICS:
   HOOD MATERIAL: DIE CAST ALUMINIUM ALLOY
   SURFACE: POWDER COATED
   DEGREE OF PROTECTION: IP68 (MATED)

注释:
1. 技术参数:
   上壳材料: 铝合金
   表面处理: 粉末喷涂
   防护等级: IP68(配合)

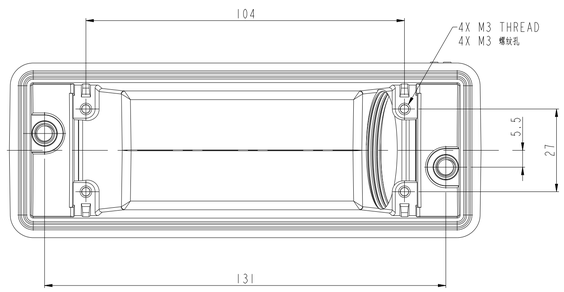

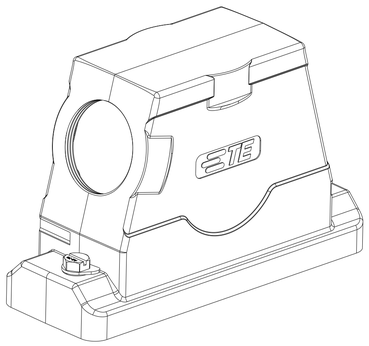

TYPE 1; SIDE ENTRY
类型1:侧出

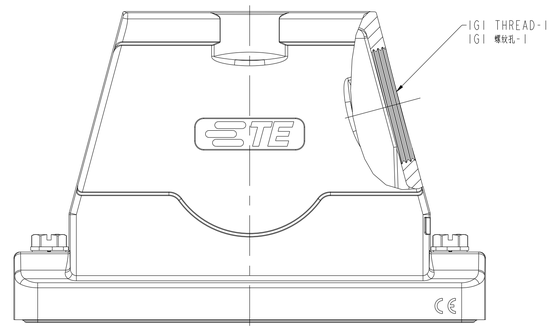

SECTION A-A

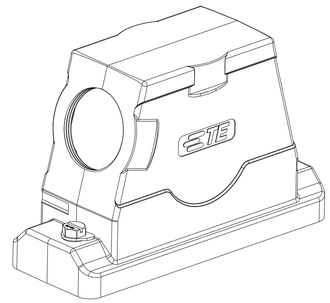

TYPE 2; TOP & SIDE ENTRY
类型2:顶侧出

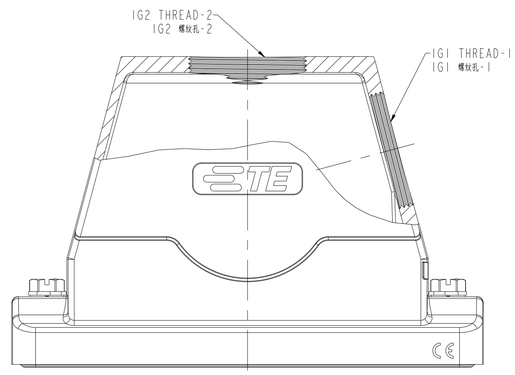

SECTION A-A

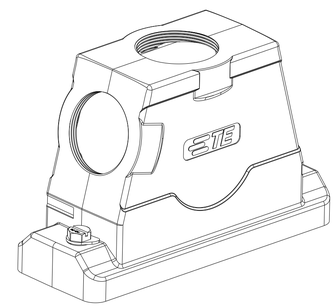

ALL DIMENSIONS ARE SAME AS TYPE 1,EXCEPT THOSE DEFINED IN THIS TYPE.
除了在本类型中定义的尺寸外,其它尺寸同类型1

PART NUMBER 料号	PART DESCRIPTION 描述		IG1 THREAD-1 IG1 螺纹孔-1	IG2 THREAD-2 IG2 螺纹孔-2	TYPE 类型
T1A40242250-000	H24BPR-TG/SA-2M50	H24BPR PANEL MOUNTED HOOD,SIDE/TOP ENTRY 2M50, POWDER COATED,GREY H24BPR面板安装壳体,侧/顶出2M50,灰色粉末喷涂	M50X1.5	M50X1.5	TYPE2 类型2
T1A40242240-000	H24BPR-TG/SA-2M40	H24BPR PANEL MOUNTED HOOD,SIDE/TOP ENTRY 2M40, POWDER COATED,GREY H24BPR面板安装壳体,侧/顶出2M40,灰色粉末喷涂	M40X1.5	M40X1.5	
T1160242140-000	H24BPR-TSA-M40	H24BPR PANEL MOUNTED HOOD,SIDE ENTRY M40, POWDER COATED,GREY H24BPR面板安装壳体,侧出M40,灰色粉末喷涂	M40X1.5	-	TYPE1 类型1

THIS DRAWING IS A CONTROLLED DOCUMENT.

DIMENSIONS: mm

TOLERANCES UNLESS OTHERWISE SPECIFIED:
0 PLC ±-
1 PLC ±-
2 PLC ±-
3 PLC ±-
4 PLC ±-
ANGLES ±-

MATERIAL - -
FINISH - -

DWN QIANG YUAN 17MAR2017
CHK GINO YAO 17MAR2017
APVD CHRIS WANG 17MAR2017
PRODUCT SPEC 108-137014
APPLICATION SPEC 114-137014-1
WEIGHT -

TE Connectivity

NAME H24BPR-TSA/TGA-PG/M

SIZE	CAGE CODE	DRAWING NO	RESTRICTED TO
A1	00779	C-T1XX024XXXX000	

CUSTOMER DRAWING SCALE 1:1 SHEET 1 OF 1 REV E