© 2022 TE Connectivity. All Rights Reserved.

REVISIONS					
P	LTR	DESCRIPTION	DATE	DWN	APVD
	A	INITIAL	09AUG2022	DW	CW
	A1	ECR-23-170694	29MAR2023	DW	CW
	A2	ECR-23-193537	27NOV2023	DW	CW
	A3	ECR-24-206744	24APR2024	DW	CW

基本尺寸	<=6	>6-30	>30-50	>50-100	未注角度
公差	±0.1	±0.2	±0.3	±0.5	±0.5°

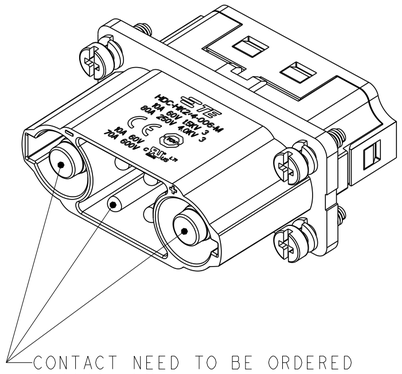

CONTACT NEED TO BE ORDERED SEPARATELY
端子需要单独订购，不包含在此料号中.

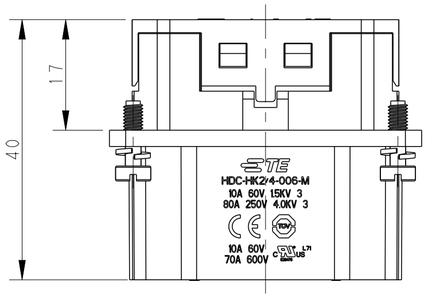

CERTIFICATION	PARAMETERS
Acc. to CUL(CNR)	POWER CURRENT:70A @AWG 6(16 mm²); SIGNAL CURRENT:10A @AWG 14(2.5 mm²); 电源电流:70A @AWG 6(16 mm²); 信号电流:10A @AWG 14(2.5 mm²)
Acc. to UL(USR)	POWER CURRENT:80A @AWG 6(16 mm²); SIGNAL CURRENT:3A @AWG 22(0.3 mm²); 电源电流:80A @AWG 6(16 mm²); 信号电流:3A @AWG 22(0.3 mm²)
Acc. to TUV	POWER CURRENT:70A @AWG 6(16 mm²); SIGNAL CURRENT:10A @AWG 14(2.5 mm²); 电源电流:70A @AWG 6(16 mm²); 信号电流:10A @AWG 14(2.5 mm²)

NOTES:
1. TECHNICAL CHARACTERISTICS:
   INSULATION MATERIAL: PC, BLACK
   RATING VOLTAGE: POWER:250V MAX.; SIGNAL:60V MAX.
   RATING CURENT: POWER:80A MAX.; SIGNAL:10A MAX.
   INSULATION RESISTANCE: >=400MΩ
   RATED IMPULSE VOLTAGE: POWER: 4.0KV
   SIGNAL:1.5KV
   POLLUTION DEGREE: 3
   MATING CYCLES: 30000 CYCLES
   WIRE RANGE:
   POWER: 10-16mm² (8-6AWG)
   SIGNAL: 0.14-2.5mm² (26-14AWG)
   CONTACT TYPE: CRIMP CONTACT
2. CONTACT NEED TO BE ORDERED SEPARATELY
   POWER CONTACT PN REFER TO DRAWING: T2400031XX0002
   SIGNALCONTACT PN REFER TO DRAWING: T2030031 0XX000

注释：
1. 技术参数：
   绝缘材料： PC, 黑色
   额定电压： 电源:250V MAX.; 信号:60V MAX.
   额定电流： 电源:80A MAX.; 信号:10A MAX.
   绝缘电阻： >=400MΩ
   额定脉冲电压： 电源: 4.0KV; 信号: 1.5KV
   污染等级： 3
   插拔次数： 30000次
   接线范围：
   电源:10-16mm² (8-6AWG)
   信号: 0.14-2.5mm² (26-14AWG)
   接线类型： 冷压接
2. 端子需要单独订购
   电源端子料号参考图面： T2400031XX0002
   信号端子料号参考图面： T2030031 0XX000

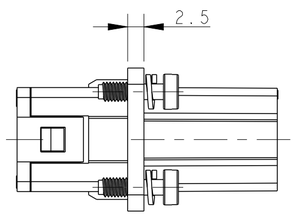

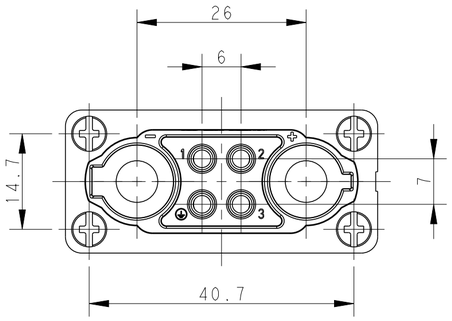

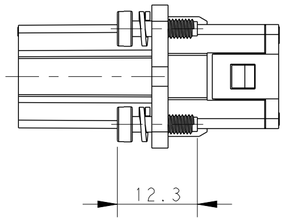

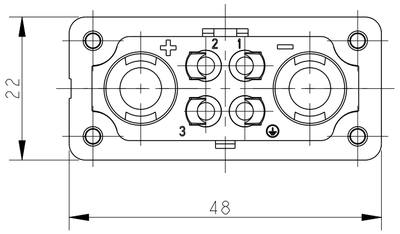

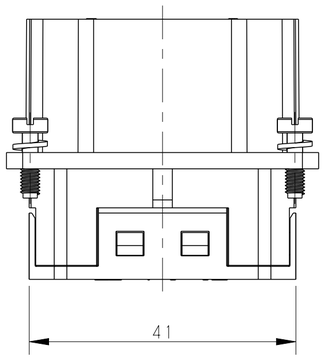

PANEL CUT FOR INSERT FOR REFERENCE

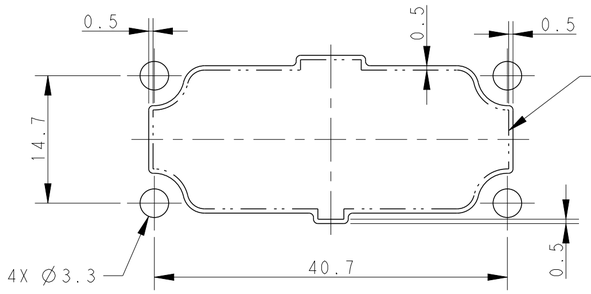

DOT LINE SHOW PRODUCT OUTLINE
PANEL SIZE OFFSET 0.5MM FROM PRODUCT OUTLINE
虚线框为产品的外轮廓
面板尺寸从产品向外偏移0.5mm

PART NUMBER 产品料号	PART DESCRIPTION 产品描述	
T2120062101-001	HK2/4-006-M	HK2/4-006 MALE INSERT HK2/4-006 公插

THIS DRAWING IS A CONTROLLED DOCUMENT.

DIMENSIONS: mm

TOLERANCES UNLESS OTHERWISE SPECIFIED:
0 PLC ±-
1 PLC ±-
2 PLC ±-
3 PLC ±-
4 PLC ±-
ANGLES ±-

MATERIAL - -
FINISH - -

DWN DAVID WANG 28JUN2022
CHK GINO YAO 28JUN2022
APVD CHRIS WANG 28JUN2022
PRODUCT SPEC 108-137613
APPLICATION SPEC 114-137613
WEIGHT -

TE Connectivity

NAME HK2/4-006-M

SIZE	CAGE CODE	DRAWING NO	RESTRICTED TO
A2	00779	C-T2120062101001	-

CUSTOMER DRAWING | SCALE 3:2 | SHEET 1 OF 1 | REV A3

1471-9 (3/13)